ORDER No.ACED040455C1

C7

Service Manual

AUTOMOTIVE AFTERMARKET

CQ-VD7700U

In-Dash 7” Widescreen Color LCD Monitor TV/DVD/SD Receiver

SPECIFICATIONS

Specifications*

Display Unit	
General	
Power Supply	**DC 12V (11V - 16V),** **Test Voltage 14.4V** **Negative Ground**
Current Consumption	**Less than 1.5A**
Monitor	
Liquid Crystal Panel	**7” wide**
Screen Dimensions (W×H×D)	**6-1/16” × 3-7/16” × 6-15/16”** **(154 × 87 × 177mm)**
Number of Pixels	**336,960 pixels**
	(234 vertical × 480 horizontal × 3)
Valid Pixel Ratio	**Over 99.99%**
Display Method	**Transparent color filter format**
Drive Method	**TFT (Thin Film Transistor)**
	active matrix format
Light Source	**Internal light**
	(Built-in small fluorescent lamp)
Hide-away Unit	
General	
Power Supply	**DC 12V (11V - 16V),** **Test Voltage 14.4V** **Negative Ground**
Current Consumption	**Less than 10A(During Disc Playback)**
Maximum Power Output	**70W×4ch×+35W(at 16V)**
Compatible Speaker Impedance	**4-8 Ω**
Video Input Signal	**Composite Video Signal, / 1.0 Vp-p (75 Ω)**
Audio Input Sensitivity	**2 Vrms**
Video Output Signal	**Composite Video Signal, / 1.0 Vp-p (75 Ω)**
Pre-Amp Output Voltage	**5 Vrms**
Pre-Amp Output Impedance	**Less than 60 Ω**
FM Stereo Radio	
Frequency Range	**87.9 - 107.9MHz**
Usable Sensitivity	**12dBf**
Stereo Separation	**35dB (1kHz)**
S/N Ratio	**70dB**
AM Stereo Radio	
Frequency Range	**530 - 1710kHz**
Usable Sensitivity	**28 dB/ μ V**
Image Rejection Ratio	**50 dB**
Video Section	
Signal Format	**NTSC (Standard signal format in U.S. and Japan)**

	U.S. and Japan)
Video Output	75 Ω , 1 Vp-p
Region Number	1 and ALL
Audio Section	
Frequency Characteristics	
(Pre-Amp Output)	
(When “LARGE” is Selected)	
Front L/R, Center, / Rear(Surround)L/R	20Hz - 88kHz
Delay Time	
Dolby Digital	
Center	0-5ms
Rear (Surround) L/R	0-15ms
Dolby Pro Logic II	
Rear (Surround) L/R	15-30ms
Distortion	
Front L/R	0.015% (1kHz,0dB,PCM Input)
S/N Ratio (During DVD Playback)	95dB
Dimensions** (W × H × D)	
Display Unit	7” × 1-15/16” × 6-1/2” / (178 × 50 × 165 mm)
Hide-away Unit	13-1/8” × 1-3/4” × 6-15/16” / (334 × 44 × 176 mm)
Weight**	
Display Unit	5lbs. 1oz. (2.3 kg)
Hide-away Unit	5lbs. 4oz. (2.4 kg)

* Specifications and the design are subject to possible modification without notice due to improvements.
** Dimensions and Weight shown are approximate.
-Above specifications comply with EIA standards.

Panasonic®

IMPORTANT SAFETY NOTICE

There are special components used in this equipment which are important for safety. These parts are marked by ⚠ in the Schematic Diagrams, Circuit Board Diagrams, Exploded Views and Replacement Parts List. It is essential that these critical parts should be replaced with manufacturer's specified parts to prevent shock, fire or other hazards. Do not modify the original design without permission of manufacturer.

1. ABOUT LEAD FREE SOLDER (PbF)

Distinction of PbF PCB:

PCBs (manufactured) using lead free solder will have a PbF stamp on the PCB.

Caution :

- Pb free solder has a higher melting point than standard solder; Typically the melting point is 50 - 70°F (30 - 40°C) higher. Please use a soldering iron with temperature control and adjust it to 700 ± 20°F (370 ± 10°C). In case of using high temperature soldering iron, please be careful not to heat too long.

- Pb free solder will tend to splash when heated too high (about 1100°F/600°C)

- This lead free solder will be used for the products after serial No. 1,000,001.

2. FEATURES

- Integration of the monitor, TV tuner, FM/AM radio, DVD Video / Audio player, Video CD player, CD/MP3 player and SD-card player

- Built-in Dolby Digital decoder, DTS decoder, Dolby Pro Logic ll decoder

- Built-in DSP

- 7-inches wide LCD (Liquid Crystal Display) display

- GUI (Graphic User Interface) with touch panel

- Image capture function

- 70W High power high-efficiency digtal power amplifier

- ID code

- External extension terminal

- CD changer control function

3. REPLACING THE FUSE

Use fuses of the same specified rating (5A, 15A). Using different substitutes or fuses with higher ratings, or connecting the unit directly without a fuse, could cause fire or damage to this unit.

4. MAINTENANCE

Your products is designed and manufactured to ensure a minimum of maintenance. Use a soft cloth for routine exterior cleaning. Never use benzine, thinner or other solvent.

5. LASER PRODUCTS

CAUTION:

This product utilizes a laser diode with the unit turned "on", laser radiation is emitted from the pickup lens.
Laser radiation from the pickup lens is safety level, but be sure the followings:

1. Do not disassemble the optical pickup unit, since radiation from exposed laser diode is dangerous.
2. Do not adjust the variable resistor on the pickup unit. It was already adjusted.
3. Do not look at the focus lens using optical instruments.
4. Recommend not to look at pickup lens for a long time.

DANGER! Visible and invisible laser radiation when open. Avoid direct exposure to beam.

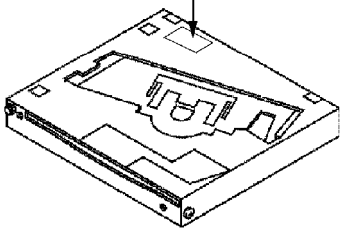

Deck Ass'y (Upper Side)

Caution
This Product utilizes a laser.
Use of controls or adjustments or performance of procedures other than those specified herein may result in hazardous radiation exposure.

6. DIMENSIONS

Display Unit

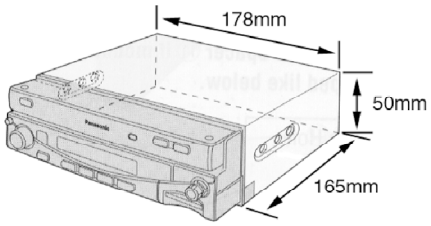

Hide-away Unit

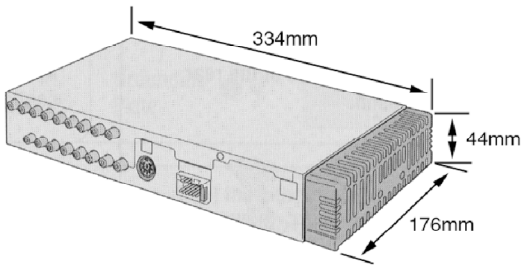

7. WIRING CONNECTION

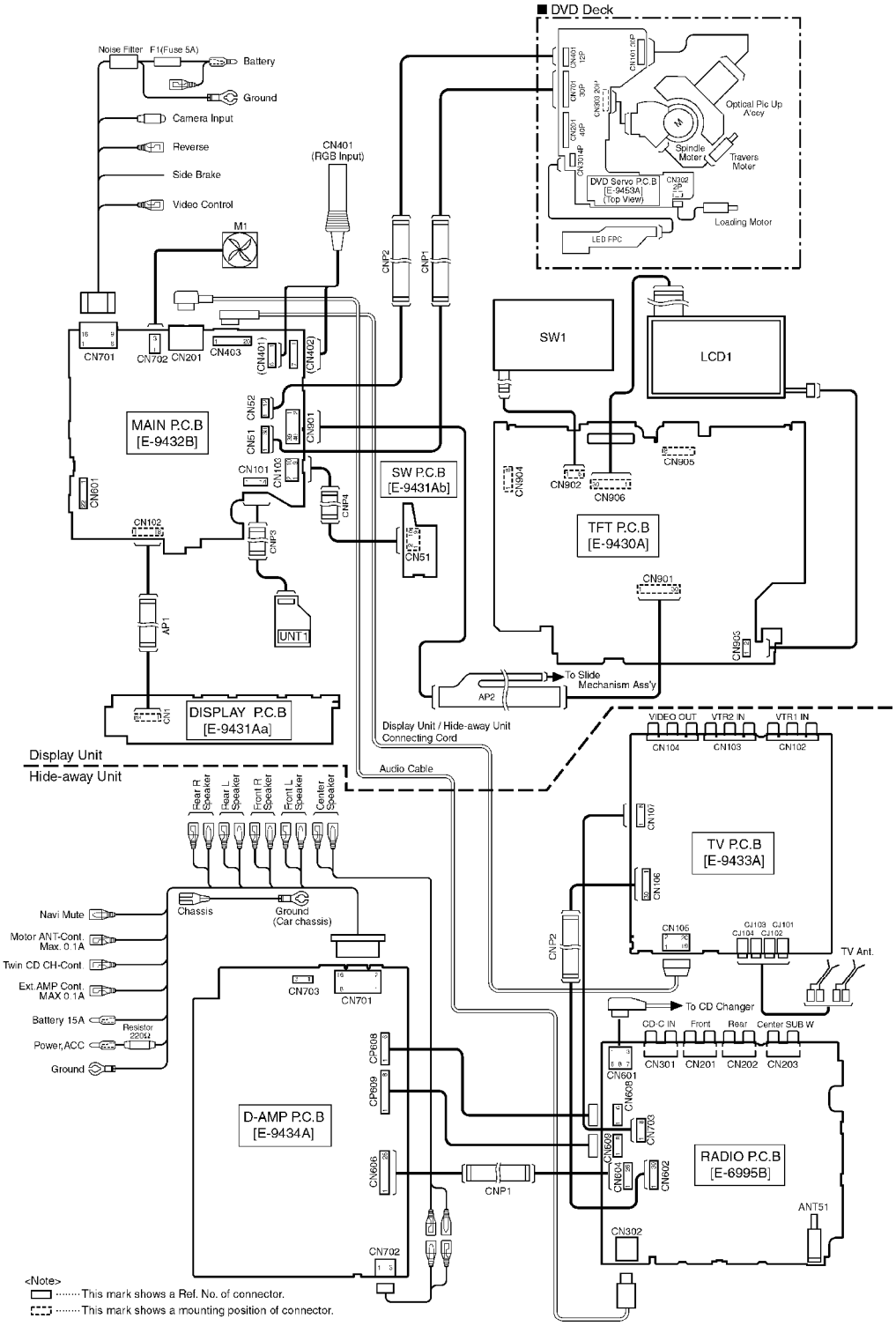

8. BLOCK DIAGRAM

8.1. Main Block (1/3)

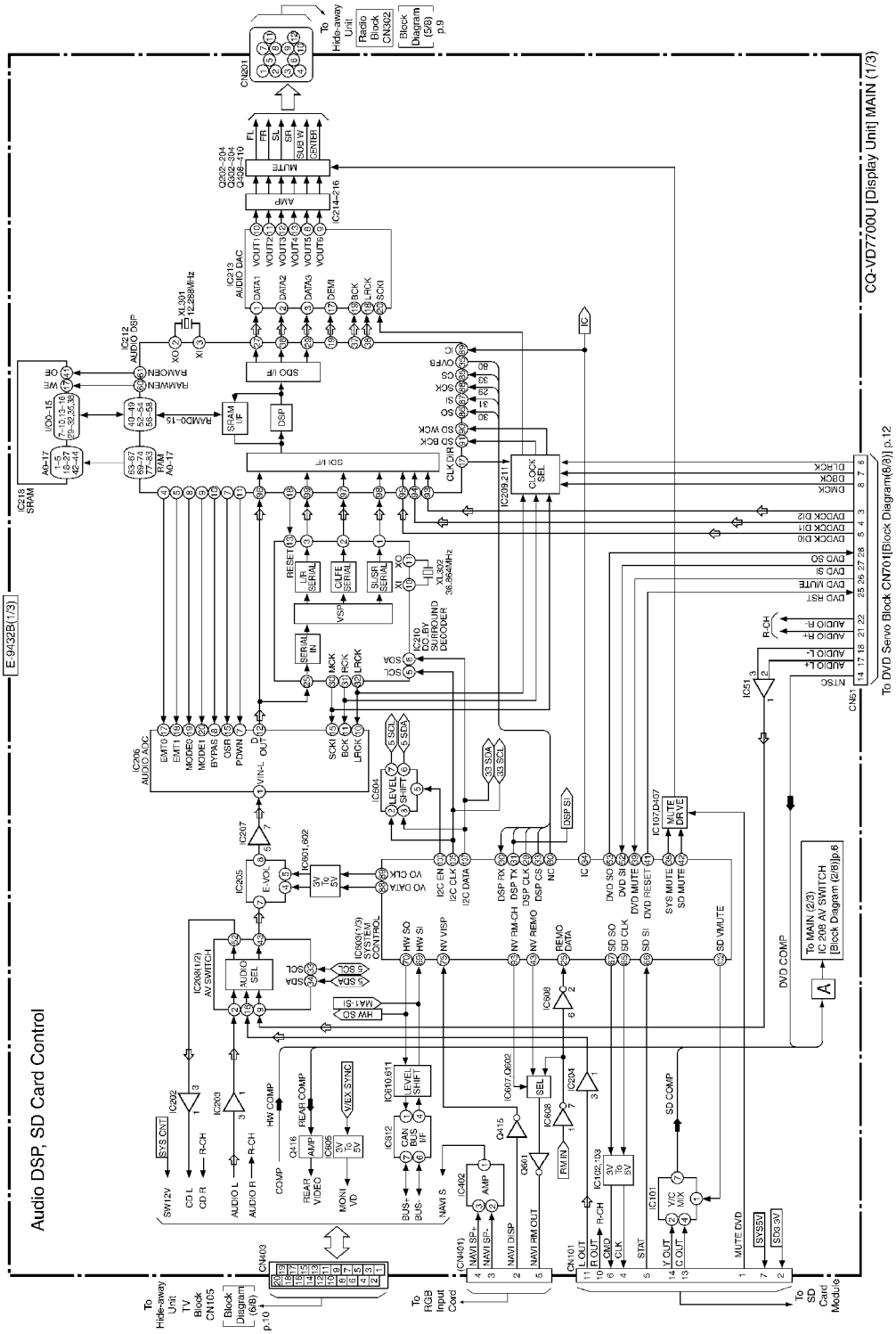

8.2. Main Block (2/3)

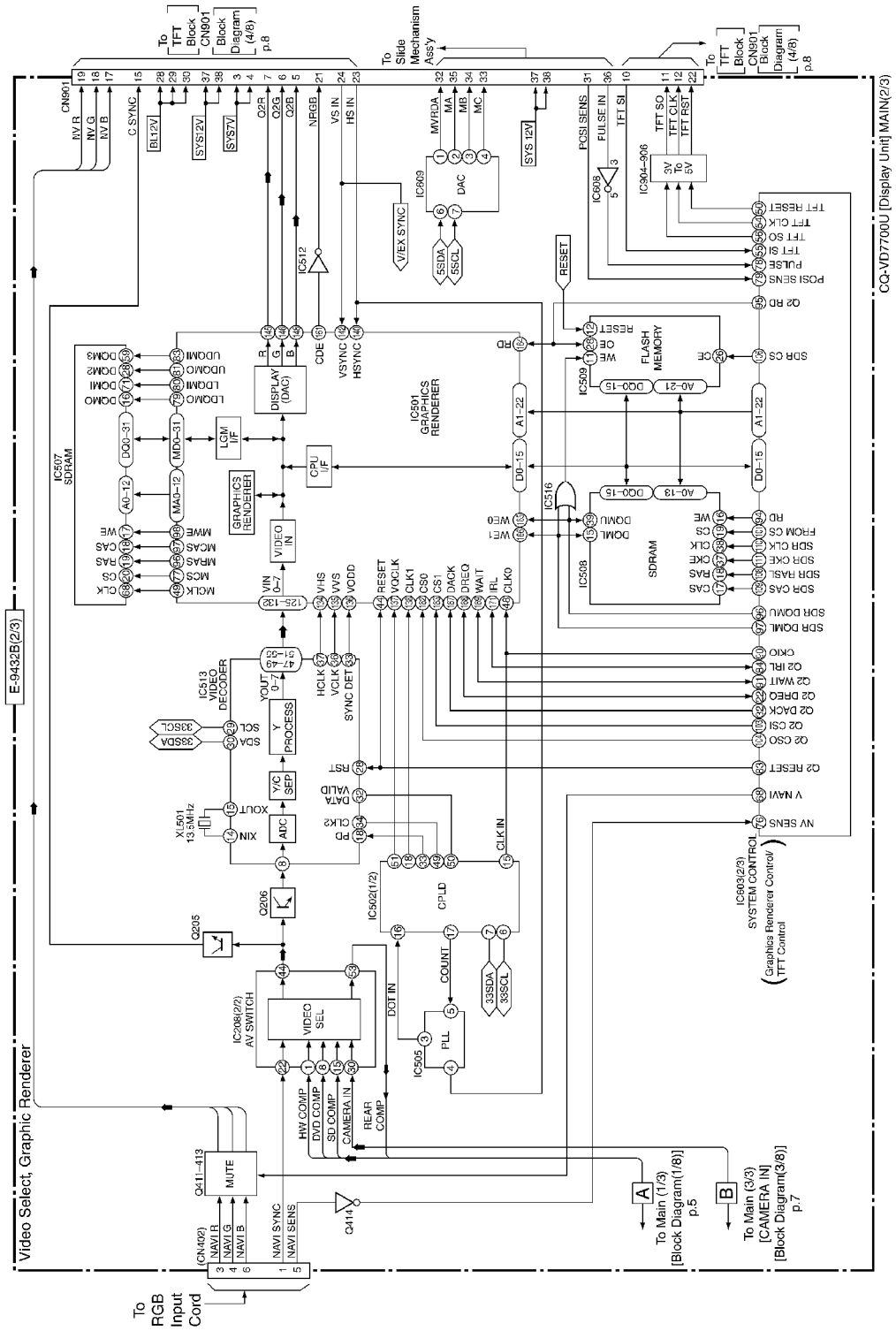

8.3. Main Block (3/3)

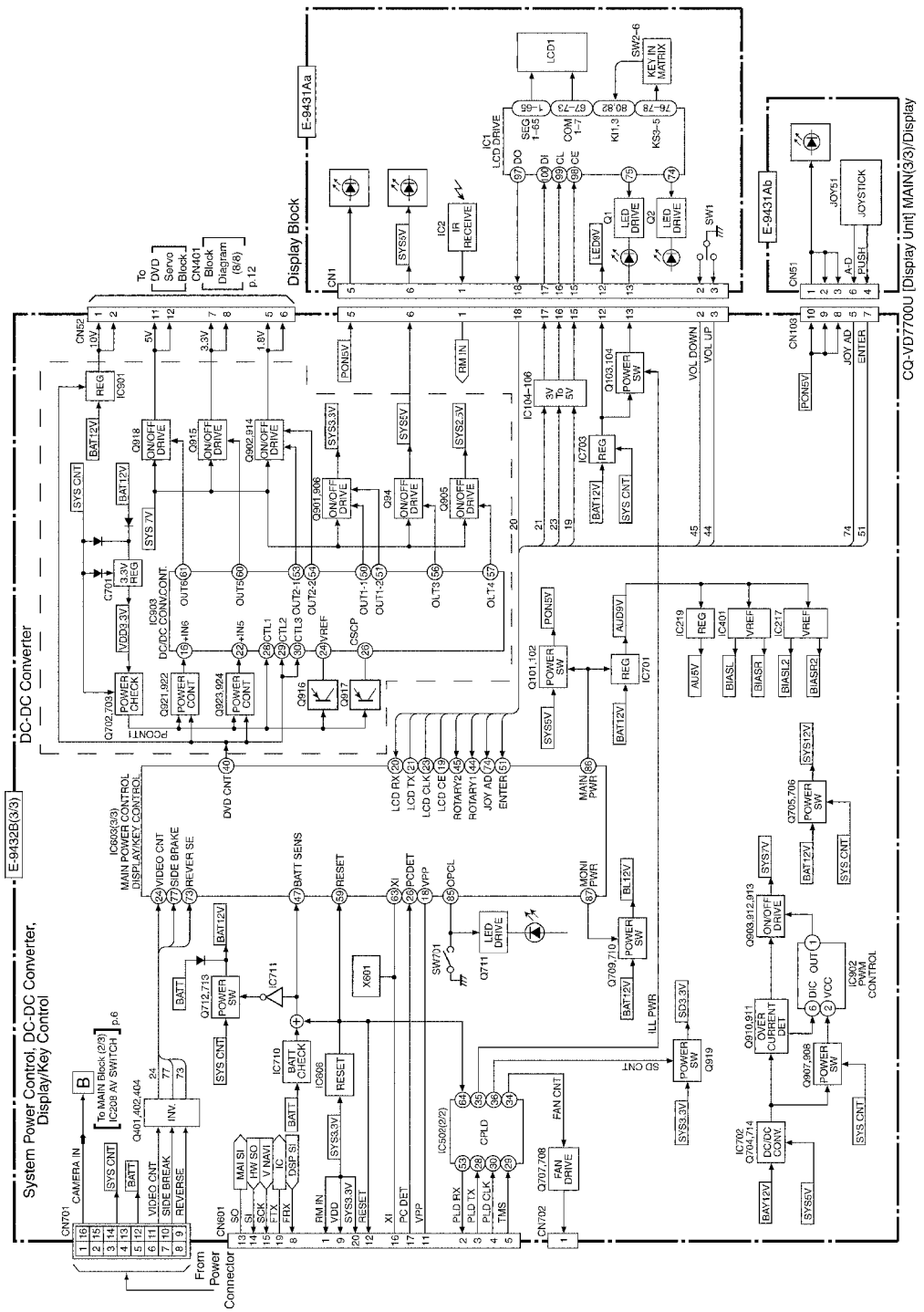
CQ-VD7700U [Display Unit] MAIN(3/3)/Display
E-9432B(3/3)
System Power Control, DC-DC Converter, Display/Key Control
DC-DC Converter
Display Block
E-9431Aa
E-9431Ab
LCD1
KEY IN MATRIX
JOYSTICK
From Power Connector
To DVD Servo Block CN401 Block Diagram (6/6) p.12
To MAIN Block (2/3) IC209 AV SWITCH p.6

8.4. TFT Block

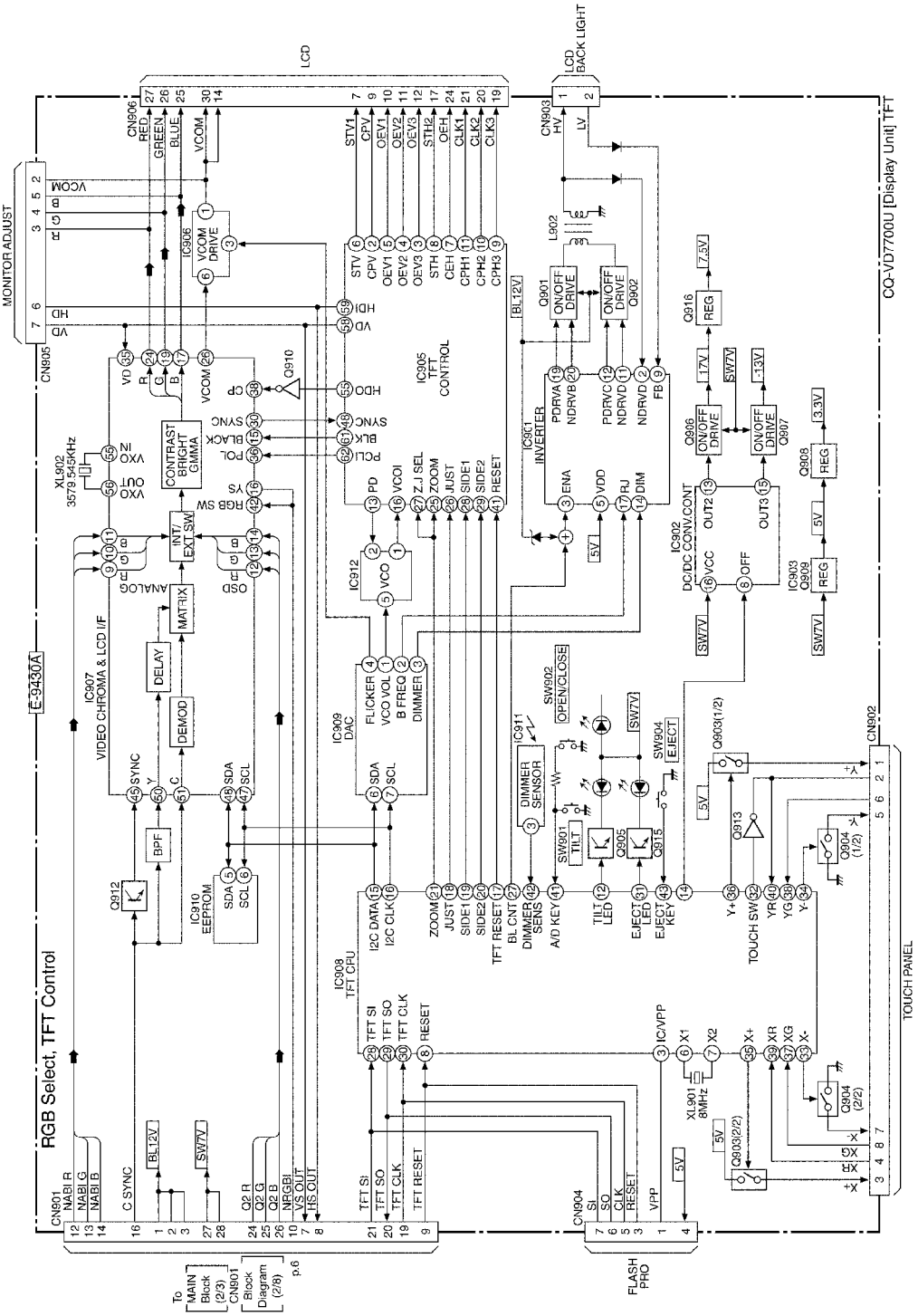

8.5. Radio Block

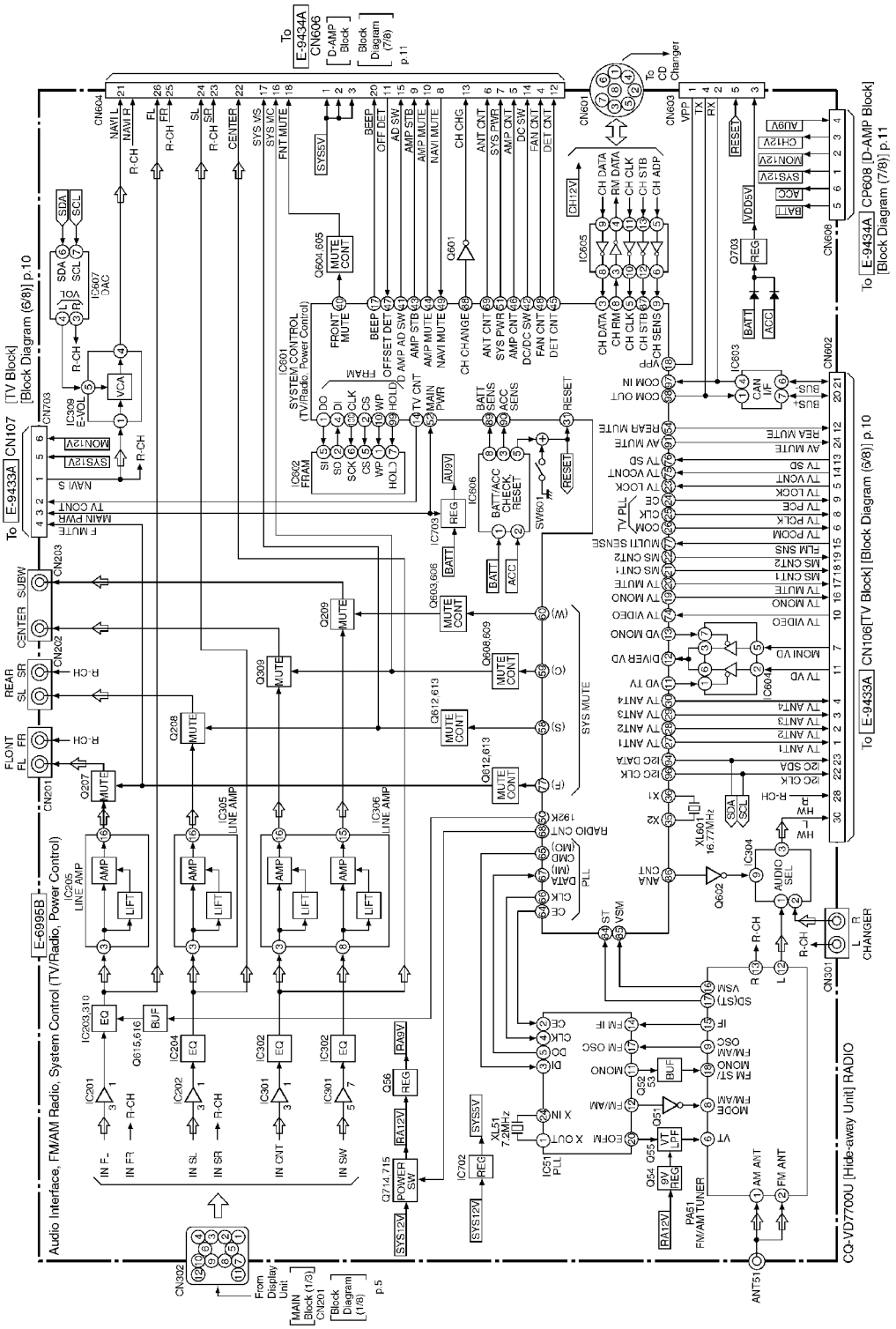
Audio Interface, FM/AM Radio, System Control (TV/Radio, Power Control)
E-6995B
CQ-VD7700U [Hide-away Unit] RADIO
[TV Block] [Block Diagram (6/8)] p.10
To E-9433A CN107
To E-9434A CN606 [D-AMP Block] [Block Diagram (7/8)] p.11
To E-9434A CP608 [D-AMP Block] [Block Diagram (7/8)] p.11
To E-9433A CN106[TV Block] [Block Diagram (6/8)] p.10
To CD Changer
From Display Unit [MAIN Block (1/3)] CN201 [Block Diagram (1/8)] p.5
CHANGER
ANT51
IC601 SYSTEM CONTROL (TV/Radio, Power Control)
IC305 LINE AMP
IC306 LINE AMP
IC603 CAN I/F
IC604 MONI VD
IC605
IC606
IC607 DAC
IC609 RADIO CNT
IC702 REG
IC703 REG
IC304 AUDIO SEL
IC51 PLL
XL51 7.2MHz
XL601 16.77MHz
Q602
Q603,606 MUTE CONT
Q604,605 MUTE CONT
Q608,609 MUTE CONT
Q612,613 MUTE CONT
Q703 REG
PA51 FM/AM TUNER
SW601 BATT/ACC CHECK, RESET
SYS MUTE
PLL
RESET
BATT
ACC
AU9V
SYS12V
RA12V
SYS5V
SYS2V
CH12V
VDD5V
CN201
CN202
CN203
CN301
CN302
CN601
CN602
CN603
CN604
CN608
CN703

8.6. TV Block

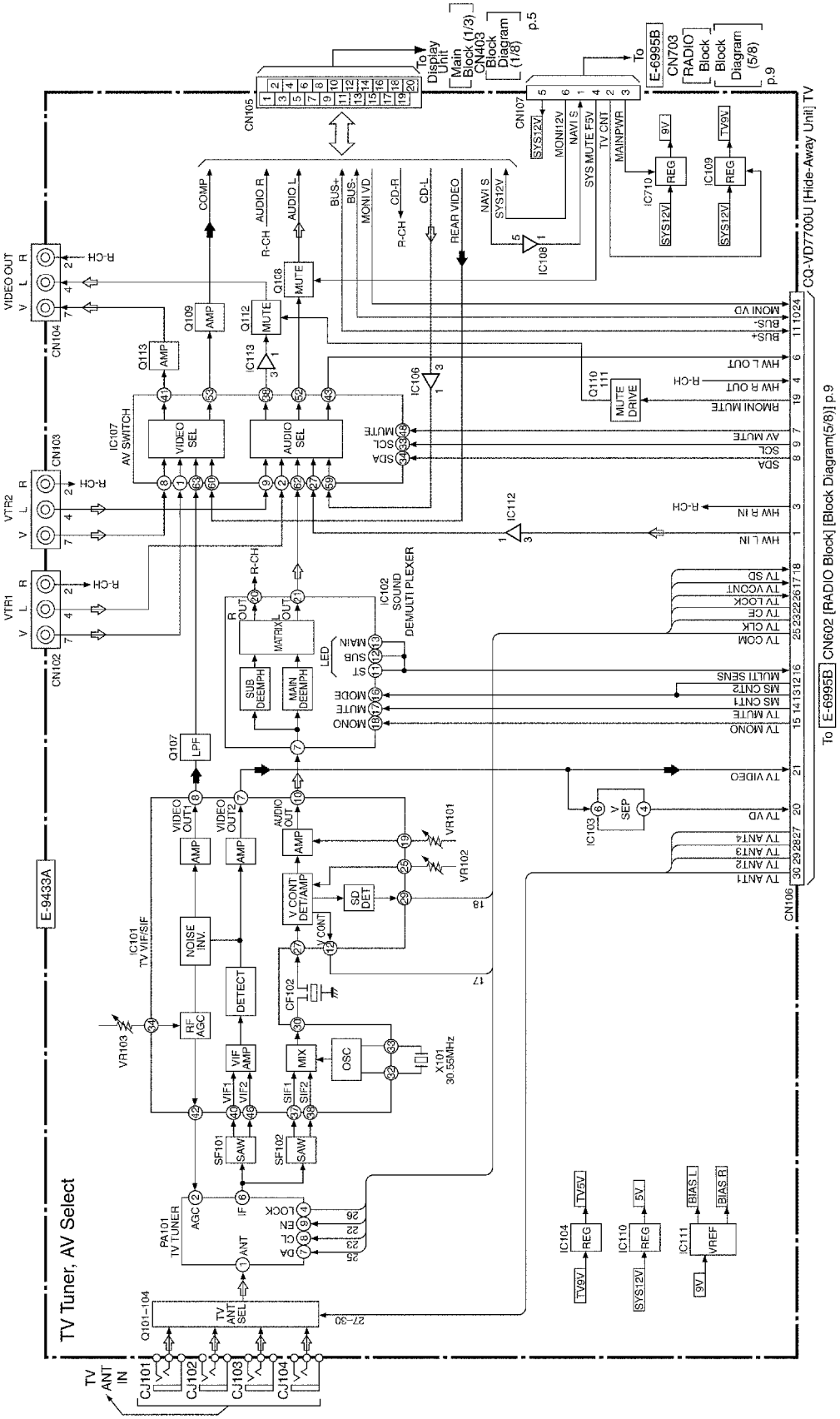

8.7. D-AMP Block

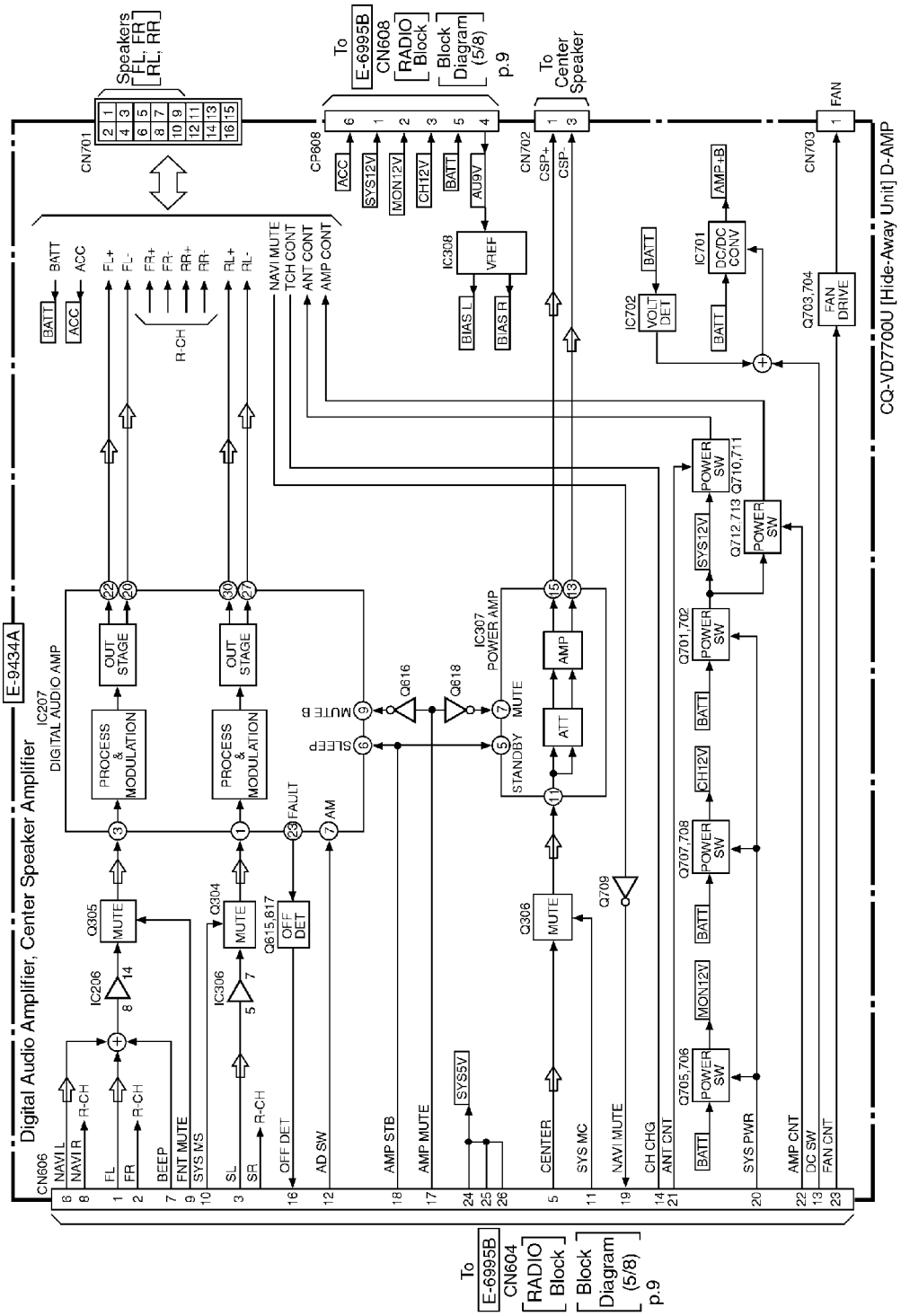

8.8. DVD Servo Block

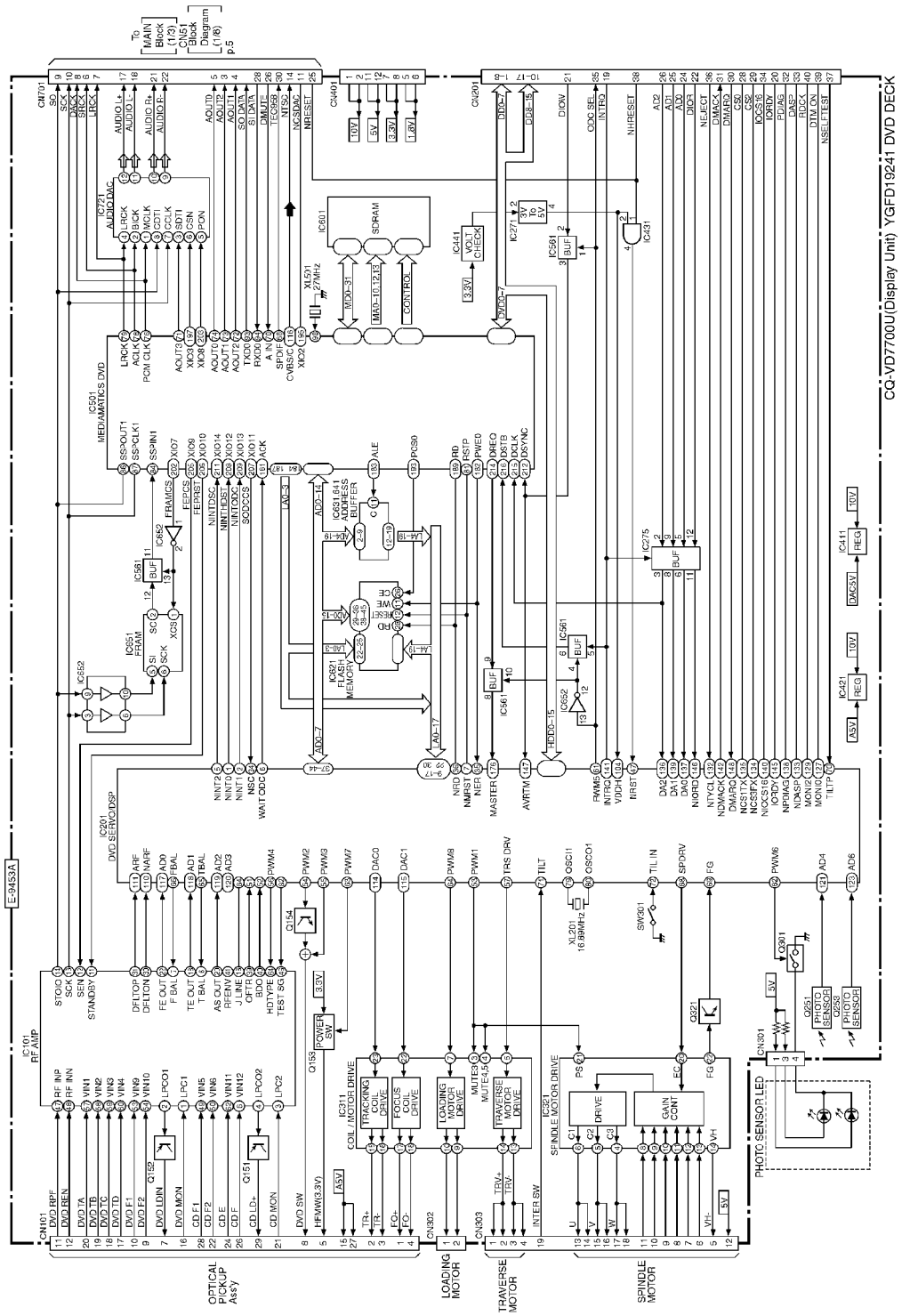

9. DISASSEMBLY INSTRUCTIONS

Disassembly of Display Unit

■Front Panel

1. After pressing the Open Button, open the Front Panel.

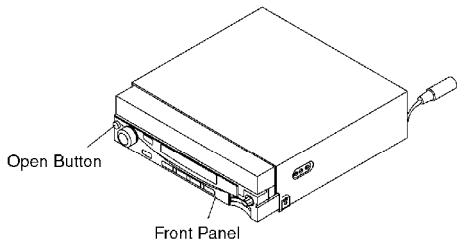

2. After removing the screw (◇), remove the Front Panel.

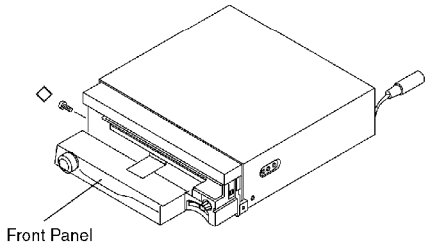

3. After removing the screw (△) from the bottom side, remove the Connector Cover.

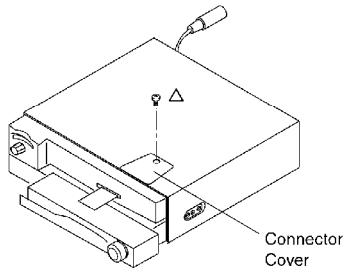

4. Disconnect the Flexible PCB (AP1), which is connected to the Front Panel, from CN102 on the Main PCB (E-9432B).

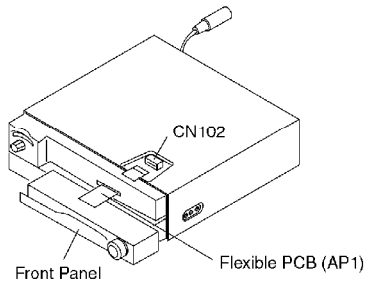

■Monitor

1. Pull out the Monitor to the arrow direction.

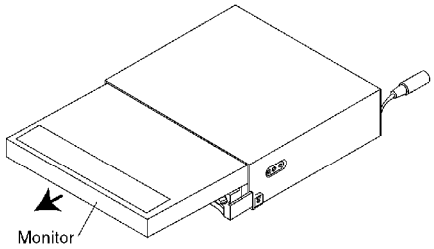

2. After removing the two screws (◎) and one screw (▲), remove the Plate.

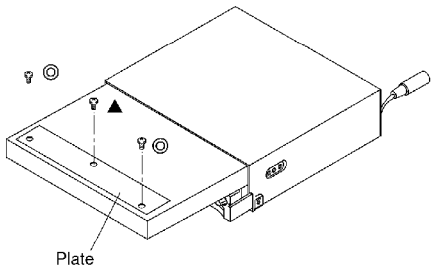

3. After removing the four screws (☆), remove the Monitor Ass'y.

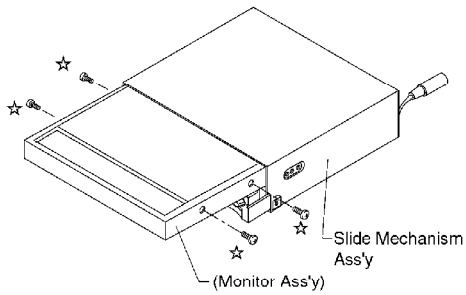

4. Disconnect the Flexible PCB (AP2) from CN901 on the TFT PCB (E-9430A).

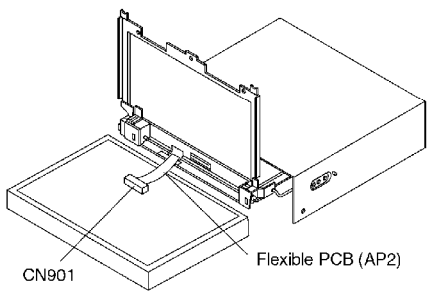

10. TERMINALS DESCRIPTION

10.1. Main Block

IC603 : C2DBJH000021

Pin No.	Name	Description	I/O	(V)
1	D14	Data bus14	I/O	1.0
2	D13	Data bus13	I/O	0.7
3	D12	Data bus12	I/O	1.0
4	D11	Data bus11	I/O	0.9
5	D10	Data bus10	I/O	1.8
6	D9	Data bus9	I/O	1.2
7	D8	Data bus8	I/O	1.5
8	VDD3	Positive power supply (3.3V)	-	3.4
9	VSS	GND	-	0
10	D7	Data bus7	I/O	1.4
11	D6	Data bus6	I/O	1.3
12	D5	Data bus5	I/O	1.0
13	D4	Data bus4	I/O	1.2
14	D3	Data bus3	I/O	1.1
15	D2	Data bus2	I/O	1.3
16	D1	Data bus1	I/O	1.1
17	D0	Data bus0	I/O	1.3
18	VPP	Selects the operating mode(single chip mode)	I	0
19	LCD CE	LCD driver CE	O	0.5
20	LCD SO	LCD communication data input terminal	I	3.4
21	LCD SI	LCD communication data output terminal	O	2.4
22	Q2SD DREQ	DMA demand	I	3.4
23	LCD CLK	LCD driver for communications clock cutput	O	3.3
24	VIDEO CONT	VIDEO CONT control	I	3.4
25	RM DATA	Exterior remote signal input	I	3.0
26	PC DET	Flash rewrite detection terminal	I	0
27	VDD3	Positive power supply (3.3V)	-	3.4
28	VSS	GND	-	0
29	DSP CLK	DSP communication serial clock output	O	3.4
30	DSP SO	DSP communication serial data input	I	0.3
31	DSP SI	DSP communication serial data output	O	0

Pin No.	Name	Description	I/O	(V)
32	Q2 DACK	DMA ACC	O	3.4
33	DSP CS	DSP chip selection signal output	O	3.4
34	IC	DSP Initial clear signal output	O	3.4
35	SYS MUTE	Analog voice mute control	O	3.4
36	OPT CNT	1/8 addition of digital output permittance/non permittance	-	3.4
37	VDD3	Positive power supply (3.3V)	-	3.4
38	VSS	GND	-	0
39	DVD MUTE	DVD mute demand input	I	3.3
40	DVD CNT	DVD deck optical output control output	O	3.3
41	DVD RST	DVD deck CPU reset signal output	O	3.4
42	SD MUTE	Possible/impossible SD mute output	O	0
43	NRM OUT	Navigation remote control data signal output	O	0
44	VOL-UP	Rotary encodar signal input 1(VOL UP)	I	0
45	VOL-DOWN	Rotary encodar signal input 2(VOL DOWN)	I	3.4
46	NC	VIDEO CONT control -> NC PULL DOWN	I	0
47	VDD3	Positive power supply (3.3V)	-	3.4
48	VSS	GND	-	0
49	BATT S	Battery detection	I	3.3
50	TFT RST	Touch panel reset output	O	3.4
51	ENTER	ENTER key input	I	0
52	DVD SI	DVD deck data reception	I	3.1
53	DVD SO	DVD deck data transmission	O	3.3
54	TFT CLK	Touch microcomputer communication clock	O	3.4
55	TFT SI	Touch CPU communication data input	I	0

Pin No.	Name	Description	I/O	(V)
56	TFT SO	Touch CPU communication data output	O	0.3
57	MODE1	Operation mode indication (single chip mode)	I	0
58	MODE0	Operation mode indication (single chip mode)	I	0
59	RESET	System reset input	-	3.4
60	CK SEL	Input clock selection pin	I	0
61	CK VDD3	Power supply for clock(3.3V)	-	3.4
62	X2(NC)	No Connection	-	-
63	X1	System clock.	I	1.6
64	CK VSS	Ground terminal for clock	-	0
65	SD CLK	SD module communication clock	O	0
66	SD SI	SD module data input	I	0
67	SD SO	SD module data transmission	O	0
68	V NAVI	NAVI RGB signal change output	O	0
69	HW SI	Serial data reception.	I	2.2
70	HW SD	Serial data transmission.	O	0
71	AVDD3	Power supply for A/D converter(3.3V)	-	3.4
72	AVSS	GND	-	0
73	REVERSE	Reverse detection	I	3.4
74	JOY A/D	Joystick A/D signal input	I	3.4
75	NV DISP	Navigation screen ON detection	I	3.4
76	NV SENS	Navigation system connection detection	I	3.4
77	SIDE BRAKE	Side brake detection	I	3.4
78	PULSE	Monitor start-up position detection pulse input	I	3.0
79	POSI SENS	Monitor position voltage signal input	I	2.5
80	DVFB	AC3 SUB~DSP overflow detection	I	0
81	VDD3	Positive power supply (3.3V)	-	3.4
82	VSS	GND	-	0

Pin No.	Name	Description	I/O	(V)
83	Q2 RESET	Reset output for Q2SD	O	3.4
84	Q2 IRL	Q2SD interrupt request.	-	3.4
85	OPCL	Escutcheon panel OPEN/ CLOSE sensor	I	2.1
86	MAIN PWR	Main power supply control output	O	3.3
87	MONI PWR	Monitor power supply control output	O	3.3
88	VODATA	DAC data for VTR voice	O	0
89	VOCLK	DAC clock for VTR voice	O	0
90	CKIO	System clock I/O.	O	1.7
91	Q2 WAIT	Hardware weight demand input.	I	3.4
92	ILL	NC(Ilmi detection input signal)	O	0.5
93	NVRM CH	NAV remote control output signal change output	O	0
94	RD	R/W switch demand.	O	3.4
95	Q2 RD	Lead strobe.	O	1.7
96	SDR DQMU	High rank byte access in SDRAM	O	3.3
97	SDR DQML	Low rank position byte access in SDRAM	O	3.3
98	VDD3	Positive power supply (3.3V)	-	3.4
99	VSS	GND	-	0
100	I2C EN	I2C bus enable output	O	3.4
101	SDR-CS	CS for FLASH ROM. Area 5	O	3.2
102	SD-VMUTE	SD image mute signal output	O	3.3
103	Q2 CS1	Area 1CS. Q2SD Register	O	3.4
104	Q2 CS0	Area 0CS. UGM of Q2SD	O	3.4
105	33SCL	I2C bus clock output	O	3.4
106	FROM CS	CS for SDRAM. Area 4	O	1.7
107	33SDA	I2C bus data output/ACK detection	O	3.4
108	SDR RASL	RAS (using the low rank 32Mbyte) for SDRAM.	O	3.3
109	SDR CAS	CAS (using the low rank 32Mbyte) for SDRAM.	-	3.4
110	SDR CLK	SDRAM CLK	-	1.8

Pin No.	Name	Description	I/O	(V)
111	SDR CKE	CK enable	-	3.4
112	VDD3	Positive power supply (3.3V)	-	3.4
113	VSS	Ground potential	-	0
114	A25(NC)	No Connection	-	-
115	A24(NC)	No Connection	-	-
116	A23(NC)	No Connection	-	-
117	A22	Address bus 22	-	0.4
118	A21	Address bus 21	-	0.4
119	A20	Address bus 20	-	0.5
120	A19	Address bus 19	-	1.2
121	A18	Address bus 18	-	0.8
122	A17	Address bus 17	-	1.2
123	A16	Address bus 16	-	1.1
124	VDD3	Positive power supply (3.3V)	-	3.4
125	VSS	GND	-	0
126	A15	Address bus 15	-	0.9
127	A14	Address bus 14	-	1.5
128	A13	Address bus 13	-	1.6
129	A12	Address bus 12	-	1.3
130	A11	Address bus 11	-	0.9
131	A10	Address bus 10	-	1.2
132	A9	Address bus 9	-	1.5
133	A8	Address bus 8	-	1.1
134	VDD3	Positive power supply (3.3V)	-	3.4
135	VSS	GND	-	0
136	A7	Address bus 7	-	1.1
137	A6	Address bus 6	-	1.8
138	A5	Address bus 5	-	1.3
139	A4	Address bus 4	-	1.2
140	A3	Address bus 3	-	1.2
141	A2	Address bus 2	-	1.2
142	A1	Address bus 1	-	1.2
143	A0(NC)	No Connection	-	-
144	D15	Data bus15	-	0.6

10.2. TFT Block

IC908 : C2BBFD000503

PIN No.	Name	Description	I/O	(V)
1	UCOM 5V	In connection with VDD A/D converter standard voltage input	-	5.1
2	Avss	A/D converter ground potential	-	0
3	IC/VPP	Internal connection terminal (in connection to ground)	-	0
4	UCOM 5V	Positive power supply	-	5.1
5	VSS	GND	-	0
6	X1	Main system clock	-	2.3
7	X2	Main system clock	-	2.6
8	TFT RESET	System reset input	I	5.0
9	UCOM 5V	In connection with VDD.	-	5.1
10	XT2(NC)	No Connection	-	-
11	NC	No Connection	-	-
12	TILT LED	TILT key lighting	O	5.0
13	NC	No Connection	-	-
14	MONI CNT	Monitor power supply control signal output	O	5.1
15	SDA	I2C bus data output for Chroma IC and E2PROM	O	5.1
16	SCL	I2C bus clock output for Chroma IC and E2PROM	O	5.1
17	RESET	TFT Controller reset control	O	5.0
18	JUST	ASPECT switch signal output Just display	O	0
19	SIDE1	ASPECT switch signal output Side black 1	O	0
20	SIDE2	ASPECT switch signal output Side black 2	O	0
21	ZOOM	ASPECT switch signal output Zoom/just mode switch control	O	0
22	EVSS	Ground port	-	0
23	EVDD	Port power supply	-	5.1
24	P/N (NC)	No Connection	-	-
25	NC	No Connection	-	-
26	NC	No Connection	-	-

PIN No.	Name	Description	I/O	(V)
27	BL CN	Backlight power supply control output	O	5.1
28	TFT SI	Serial communications data output for the main CPU	O	0
29	TFT SO	Serial communications data input for the main CPU	I	0
30	TFT CLK	Serial communications clock for the main CPU	I	5.0
31	EJECT LED	Eject key LED	O	0
32	TOUCH SW	Switch output for touch panel SW detection	O	4.6
33	X-	Transistor SW output for touch panel side X (- pole)	O	0
34	Y-	Transistor SW output for touch panel sideY (- pole)	O	0
35	X+	Transistor SW output for touch panel side X (+ pole)	O	5.1
36	Y+	Transistor SW output for touch panel side Y (+ pole)	O	5.1
37	XG	Touch panel side X with respect to - pole	I	0
38	YG	Touch panel side Y with respect to - pole	I	1.0
39	XR	Touch panel side X with respect to + pole	I	0
40	YR	Touch panel side Y with respect to + pole	I	1.0
41	A/D KEY	A/D key input for TILT and OPEN/CLOSE	I	5.1
42	DIMMER SENS	DIMMER input	I	4.1
43	EJECT KEY	Eject key input	I	5.1
44	NC	No Connection	-	-

10.3. Radio Block

IC601 : C2DBKJ000209

Pin No.	Name	Description	I/O	(V)			
				FM	AM	TV	DVD
1	F SI	F RAM serial data output	O	0	0	0	0
2	F CS	F RAM chip selection	O	5.2	5.3	5.3	5.3
3	CH DATA	Data input for changer communication	I	0	0	0	0
4	F SD	F RAM serial data input	I	0.8	1.1	0.8	0.7
5	CH CLK	Clock input for changer communication	I	0	0	0	0
6	EVDD	Positive power supply for I/O port	-	5.3	5.3	5.3	5.3
7	EVSS	Ground potential for I/O port	-	0	0	0	0
8	CH RM	Changer remote controller code output	O	5.3	5.3	5.3	5.3
9	CH ADP	Twin changer adaptor detection signal input	I	0	0	0	0
10	F WP	F RAM write-protection signal output	O	0	0	0	0
11	VD TV	TV vertical synchronizing signal input switch signal output	O	0	0	5.3	0
12	DIVER VD	Vertical synchronizing signal input for diversity antenna switch control	I	2.5	2.5	5.2	2.6
13	VD MONI	Monitor side vertical synchronizing signal input switch signal output	O	0	0	0	0
14	TV CNT	TV tuner power supply control	O	0	0	5.3	0
15	NC	(Pull down)	I	0	0	0	0
16	NC	(Pull down)	I	0	0	0	0
17	BEEP	Beep signal output	O	0	0	0	0
18	VPP	Internal connection	-	0	0	0	0

Pin No.	Name	Description	I/O	(V)			
				FM	AM	TV	DVD
19	TV MONO	TV voice compulsion mono-output	O	0	0	5.3	5.3
20	TV MUTE	TV sound multi-part mute signal output	O	0	0	5.3	0
21	MS CNT1	TV voice multiple signal switch output 1	O	0	0	0	0
22	MS CNT2	TV voice multiple signal switch output 2	O	0	0	0	0
23	TV LOCK	TV PLL lock detection	I	0	0	0.2	0
24	TV PCE	Television PLL chip enable output	O	0	0	0	0
25	TV PCLK	TV PLL clock output	O	0	0	0	0
26	TV PCOM	TV PLL data output	O	0	0	0	0
27	TV ANT1	Diversity antenna 1	O	0	0	0	0
28	TV ANT2	Diversity antenna 2	O	0	0	0	0
29	TV ANT3	Diversity antenna 3	O	0	0	5.3	0
30	TV ANT4	Diversity antenna 4	O	0	0	5.3	0
31	RESET	System RESET signal input	I	5.2	5.2	5.2	5.2
32	SUB XT1(NC)	No Connection	-	-	-	-	-
33	SUB XT2(NC)	No Connection	-	-	-	-	-
34	REGC	Regulator output stable capacity connection	-	3.3	3.3	3.3	3.3
35	X2	MAIN system clock chip oscillator connection (16.766MHz)	I	1.5	1.5	1.5	1.5
36	X1	MAIN system clock chip oscillator connection (16.766MHz)	-	1.4	1.4	1.4	1.4
37	VSS	GND	-	0	0	0	0

Pin No.	Name	Description	I/O	(V)			
				FM	AM	TV	DVD
38	VDD	Positive power supply terminal	-	5.3	5.3	5.3	5.3
39	CLK OUT(NO)	No Connection	-	-	-	-	-
40	FNT MUTE	POWER IC Premute	O	5.3	5.3	5.3	0
41	AD SW	D/A convertable port for D-AMP	O	5.3	5.3	5.3	0
42	DC SW	DC/DC ON/OFF switch	O	0	0	0	0
43	AMP STB	POWER AMP control output	O	5.3	5.3	5.3	5.3
44	AMP MUTE	Internal power amplifier mute output	O	0	0	0	0
45	DET CNT	P.IC abnormality detector check mode switch	O	0	0	0	0
46	AMP CNT	External power amplifier control output	O	5.3	5.3	5.3	5.3
47	OFF DET	P.IC abnormality detection check	I	0	0	0	0
48	FAN CNT	NC OPEN(FAN motor power supply control)	O	0	0	0	0
49	NAV MUTE	Navi-mute signal input	I	0	0	0	0
50	192K	Filter switch	O	5.3	5.3	5.3	5.3
51	SYS PWR	System power supply control output	O	5.2	5.2	5.2	5.2
52	MAIN PWR	Main power supply control output	O	5.3	5.3	5.2	5.3
53	SYS MUTE	Analog voice mute control	O	5.3	5.3	5.3	0
54	REA MUTE	Mute terminal for VIDEO OUT	O	5.3	5.3	5.3	0
55	BVDD	Positive power supply	-	5.3	5.3	5.3	5.3
56	BVSS	GND	-	0	0	0	0
57	SYS MF	System mute signal output (FRONT)	O	5.3	5.3	5.3	0
58	SYS MS	System mute signal output (SURROUND)	O	5.3	5.3	5.3	0

Pin No.	Name	Description	I/O	(V)			
				FM	AM	TV	DVD
59	SYS MC	System mute signal output (CENTER)	O	0	0	0	0
60	SYS MW	System mute signal output(SW)	O	0	0	0	0
61	NC	(Pull down)	I	0	0	0	0
62	NC	(Pull down)	I	0	0	0	0
63	NC	(Pull down)	I	0	0	0	0
64	PLL CE	Chip enable output for PLL IC communication	O	0	0	0	0
65	PLL COM	Serial data output for PLL IC communication	O	0	0	0	0
66	PLL CLK	Serial clock output for PLL IC communication	O	0	0	0	0
67	PLL DATA	Serial data input for PLL IC communication	I	5.2	5.2	5.2	5.2
68	RADIO CNT	Radio power supply control output	O	5.2	5.3	0	0
69	ANT CNT	Antenna control output	O	5.2	5.2	0	0
70	NC	Connecting to GND	I	0	0	0	0
71	AVDD	Positive power supply	-	5.3	5.3	5.3	5.3
72	AVSS	A/D converter ground potential	-	0	0	0	0
73	AVREF	Standard voltage input for A/D converter	I	5.2	5.2	5.2	5.2
74	TV VIDEO	VIDEO signal input for diversity antenna switch control	I	0	0	2.4	0
75	TV VCNT	TV electric field strength input	I	0	0	1.6	0
76	TV SD	TV bureau detection	I	0	0	0	0
77	MLT SNS	TV voice multiple stereo detection	I	1.1	0.5	1.2	0.5
78	D-DET	Detection check input of D-AMP or more.	I	0	0	0	0
79	NC	Connecting to GND	I	0	0	0	0
80	NC	Connecting to GND	I	0	0	0	0
81	NC	Connecting to GND	I	0	0	0	0

Pin No.	Name	Description	I/O	(V)			
				FM	AM	TV	DVD
82	NC	Connecting to GND	I	0	0	0	0
83	NC	Connecting to GND	I	0	0	0	0
84	ST	FM stereo signal input	I	5.2	5.2	0.8	0.8
85	VSM	TUNER S meter signal input	I	0.2	0	0	0
86	ANA CNT	Analog SW switch output	O	5.3	5.3	0	0
87	CH STB	Strobe input for changer communication	I	0	0	0	0
88	CH CHANGE	Changer 1/2 switch output	O	5.3	5.3	5.3	5.3
89	BATT SNS	Battery detection	I	5.2	5.2	5.2	5.2
90	ACC SNS	Accessory detection	I	5.2	5.2	5.2	5.2
91	AV MUTE	MUTE signal output for AV switch	O	0	0	0	0
92	G-SW	VD7700/7500 initialization SW	I	5.2	5.2	5.2	5.2
93	NC	(Pull down)	I	0	0	0	0
94	I2C DATA	I2C bus data output/ ACK detection	O	5.3	5.3	5.3	5.3
95	NC	(Pull down)	I	0	0	0	0
96	I2C CLK	I2C bus clock output	O	5.3	5.3	5.3	5.3
97	RX	Communication data input (main-> sub)	I	5.2	3.2	3.2	5.2
98	TX	Communication data output (sub -> main)	O	5.3	4.4	4.4	5.3
99	F HOLD	FRAM hold output	O	0	0	0	0
100	F CLK	F RAM clock signal output	O	0	0	0	0

10.4. DVD Servo Block

IC501 C1AB00001602

Pin No.	Port	Descriptions	I/O(V)	Vol (V)
1	VDDIO	I/O pad power (3.3V)	-	3.3
2	MD10	SDRAM data bus	I/O	0
3	MD11	SDRAM data bus	I/O	0.6
4	VDD	Core power (1.8V)	-	1.8
5	MD12	SDRAM data bus	I/O	0
6	VSSIO	I/O pad ground	-	0
7	MD13	SDRAM data bus	I/O	0.7
8	MD14	SDRAM data bus	I/O	0.5
9	MD15	SDRAM data bus	I/O	0
10	VDDIO	I/O pad power (3.3V)	-	3.3
11	/DQM1	SDRAM data byte enable	O	0
12	MA9	SDRAM address bus	O	0
13	MA8	SDRAM address bus	O	0
14	VSSIO	I/O pad ground	-	0
15	MA7	SDRAM address bus	O	2.3
16	MA6	SDRAM address bus	O	1.9
17	VSS	Core ground	-	0
18	MA5	SDRAM address bus	O	1.1
19	VDDIO	I/O pad power (3.3V)	-	3.3
20	MA4	SDRAM address bus	O	2.0
21	MA3	SDRAM address bus	O	2.3
22	MCLK	SDRAM clock	O	1.7
23	VSSIO	I/O pad ground	-	0
24	CKE	SDRAM clock enable	O	3.3
25	MA2	SDRAM address bus	O	2.3
26	MA1	SDRAM address bus	O	1.0
27	VDDIO	I/O pad power (3.3V)	-	3.3
28	MA0	SDRAM address bus	O	1.0
29	MA10	SDRAM address bus	O	0
30	MA11	Not used	-	-
31	VSSIO	I/O pad ground	-	0
32	MA12	SDRAM address bus	O	2.1
33	MA13	SDRAM address bus	O	2.1
34	VDD	Core power (1.8V)	-	1.8
35	/CS0	SDRAM primary bank chip select	O	2.7
36	VDDIO	I/O pad power (3.3V)	-	3.3
37	/RAS	SDRAM command bit	O	3.1
38	/CAS	SDRAM command bit	O	2.9
39	/WE	SDRAM command bit	O	3.2
40	VSSIO	I/O pad ground	-	0
41	/DQM0	SDRAM data byte enable	O	0
42	/DQM2	SDRAM data byte enable	O	0
43	MD16	SDRAM data bus	I/O	0.5
44	VDDIO	I/O pad power (3.3V)	-	3.3
45	MD17	SDRAM data bus	I/O	0.5
46	MD18	SDRAM data bus	I/O	0.5
47	VSS	Core ground	-	0
48	MD19	SDRAM data bus	I/O	0.7
49	VSSIO	I/O pad ground	-	0
50	MD20	SDRAM data bus	I/O	0
51	MD21	SDRAM data bus	I/O	1.5
52	MD22	SDRAM data bus	I/O	1.0
53	VDDIO	I/O pad power (3.3V)	-	3.3
54	MD23	SDRAM data bus	I/O	0

Pin No.	Port	Descriptions	I/O(V)	Vol (V)
55	MD24	SDRAM data bus	I/O	0.5
56	MD25	SDRAM data bus	I/O	0.5
57	VSSIO	I/O pad ground	-	0
58	MD26	SDRAM data bus	I/O	0.5
59	MD27	SDRAM data bus	I/O	0.8
60	MD28	SDRAM data bus	I/O	0
61	MD29	SDRAM data bus	I/O	1.0
62	VDDIO	I/O pad power (3.3V)	-	3.3
63	MD30	SDRAM data bus	I/O	0.7
64	MD31	SDRAM data bus	I/O	0.5
65	/DQM3	SDRAM data byte enable	O	0
66	/CS1	Not used	O	-
67	VSSIO	I/O pad ground	-	0
68	SPDIF	S/PDIF digital audio output	O	1.3
69	VSS	Core ground	-	0
70	AIN	Digital audio input for digital micro	I	3.3
71	AOUT3	Serial audio data (Left/Right CH)	O	0
72	AOUT2	Serial audio data (Center/LFE CH)	O	0
73	AOUT1	Serial audio data (Sound Left/Right CH)	O	0
74	AOUT0	Serial audio data (Left/Right CH)	O	0
75	VDDIO	I/O pad power (3.3V)	-	3.3
76	PCMCLK	Audio DAC PCM sampling clock	O	1.8
77	VDD	Core power (1.8V)	-	1.8
78	ACLK	Audio interface serial data clock	O	1.7
79	LRCLK	Left/Right channel clock	O	1.7
80	/SRST	Reset signal	O	3.3
81	/RSTP	Power on reset	I	3.3
82	VSSIO	I/O pad ground	-	0
83	RXD1	Not used	-	-
84	SSPIN1	SSP1 data in / UART1 16X clock	I/O	15
85	VSS	Core ground	-	0
86	SSPOUT1	SSP1 sata out / UART1 DTR	I/O	0
87	SSPCLK1	SSP1 clock / UART1 CTS	I/O	3.3
88	SSPCLK0	Not used	-	-
89	VDD	Core power (1.8V)	-	1.8
90	SSIN0	Not used	-	-
91	VDDIO	I/O pad power (3.3V)	-	3.3
92	SSPOUT0	Not used	-	-
93	TXD0	UART0 serial data	O	3.2
94	RXD0	UART0 serial data	I	3.0
95	/CTS0	Not used	-	-
96	/RTS0	Not used	-	-
97	VSSIO	I/O pad ground	-	0
98	CXI	Crystal Oscillator terminal	I	1.6
99	CXO	Not used	-	-
100	OSCVSS	Oscillator ground	-	0
101	OSCVDD	Oscillator power (1.8V)	-	1.8
102	MVCLVDD	Main/Video clock PLL power (3.3V)	-	3.3
103	SCEN	Not used	-	-
104	MVCKVSS	Main/Video clock PLL Ground	-	0
105	ACLKVSS	Audio clock PLL ground	-	0
106	SCMD	Not used	-	-
107	ACLKVDD	Audio clock PLL power	-	3.3
108	VDDDAC	DAC digital power (1.8V)	-	1.8

Pin No.	Port	Descriptions	I/O(V)	Vol (V)
109	VSSDAC	DAC digital ground	-	0
110	CVBS2/CR/R	Composite Cr/Component Cr/SCART Red	O	0.5
111	IOM	Cascaded DAC differential output	O	1.0
112	C/CB/B	Chrominance/Component Cb/SCART Cb	O	0.7
113	VAA3	DAC analog power (3.3V)	-	3.3
114	Y/G	Luminance/SCART G	O	0.4
115	VSSA	DAC analog ground	-	0
116	VREF	Not used	-	-
117	VAA	Not used	-	1.8
118	CVBS/C	Composite/S-Video Chrominance	O	0.5
119	RSET	Current setting resistor connection	O	1.4
120	COMP	Compensation capacitor connection	O	2.0
121	VSS	Core ground	-	0
122	VCLK	Not used	-	-
123	VSYNC	Not used	-	-
124	HSYNC	Not used	-	-
125	VDDIO	I/O pad power (3.3V)	-	3.4
126-131	VI07-02	Not used	-	-
132	VSSIO	I/O pad ground	-	0
133	Not used	-	-	
134	Not used	-	-	
135	VDD	Core power (1.8V)	-	1.9
136-139	AD31-28	Not used	-	-
140	VDDIO	I/O pad power (3.3V)	-	3.4
141-144	AD27-24	Not used	-	-
145	/PWE3	Not used	-	-
146	AD23	Not used	-	-
147	VSSIO	I/O pad ground	-	0
148-150	AD22-20	Not used	-	-
151-153	AD19-17	Address/Data bus	I/O	0
154	VDDIO	I/O pad power (3.3V)	-	3.4
155	AD16	Address/Data bus	I/O	0
156	/PWE2	Not used	-	-
157, 158	AD15, 14	Address/Data bus	I/O	0
159	VDD	Core power (1.8V)	-	1.9
160	SCLK	External bus clock	O	2.1
161	ACK	Programmable WAIT/ACK/RDY control	I	3.4
162	VSSIO	I/O pad ground	-	0
163-168	AD13-08	Address/Data bus	I/O	0
169	VDDIO	I/O pad power (3.3V)	-	3.4
170	/PWE1	Not used	-	-
171	VSS	Core ground	-	0
172-176	AD7-3	Address/Data bus	I/O	0
177	VSSIO	I/O pad ground	-	0
178-180	AD02-00	Address/Data bus	I/O	0
181	VDDIO	I/O pad power (3.3V)	-	3.4
182	/PWE0	Byte write enable	O	0
183	ALE	Address latch enable	O	0
184-187	LA0-3	Latch address	O	3.3
188	VSSIO	I/O pad ground	-	0
189	RD	Read signal	O	3.4
190	LHLDA	Not used	-	-
191	LHLD	Not used	-	-
192	VDD	Core power (1.8V)	-	1.9

Pin No.	Port	Descriptions	I/O(V)	Vol (V)
193	/PCS0	Peripheral chip select 0	O	3.4
194	XI01	Not used	-	-
195	DACCS2	DAC output select 2	O	3.4
196	VDDIO	I/O pad power (3.3V)	-	3.4
197	DACCS1	DAC output select 1	O	3.4
198	NINTCPPM	Not used	-	-
199	CPPMCS	Not used	-	-
200	XI06	Not used	-	-
201	VSS	Core ground	-	0
202	FRAMCS	FRAM chip selection	O	0
203	DACRST	DAC reset	O	0
204	VSSIO	I/O pad ground	-	0
205	FEPCS	Front End Pro. LSI chip select	O	3.4
206	FEPRST	Front End Pro. reset	O	3.4
207	SODCCS	SODC LSI chip selection	O	3.4
208	NINTHOST	HOST interrupt	I	3.4
209	NINTDDC	DDC interrupt	I	3.2
210	VDDIO	I/O pad power (3.3V)	-	3.4
211	NINTDSC	DSC interrupt	I	3.5
212	VDD	Core power (1.8V)	-	1.9
213	DSYNV	DVD parallel mode sector SYNC	I	3.4
214	DREQ	DVD parallel mode data request	O	3.4
215	DCLK	Data sampling clock	I	3.4
216	DSTB	Parallel mode data valid/Serial mode clock	I	0.7
217	DVD0	DVD drive parallel data port	I	0
218	VSSIO	I/O pad ground	-	0
219	DVD1	DVD drive parallel data port	I	0
220	DVD2	DVD drive parallel data port	I	0
221	DVD3	DVD drive parallel data port	I	3.4
222	DVD4	DVD drive parallel data port	I	0.8
223	DVD5	DVD drive parallel data port	I	0.8
224	VDDIO	I/O pad power (3.3V)	-	3.4
225	DVD6	DVD drive parallel data port	I	3.4
226	DVD7	DVD drive parallel data port	I	3.4
227	MD0	SDRAM data bus	I/O	0.5
228	VSSIO	I/O pad ground	-	0
229	MD1	SDRAM data bus	I/O	0
230	VSS	Core ground	-	0
231	MD2	SDRAM data bus	I/O	0.8
232	MD3	SDRAM data bus	I/O	0.8
233	VDDIO	I/O pad power (3.3V)	-	3.3
234	MD4	SDRAM data bus	I/O	3.3
235	MD5	SDRAM data bus	I/O	0
236	MD6	SDRAM data bus	I/O	0.8
237	VSSIO	I/O pad ground	-	0
238	MD7	SDRAM data bus	I/O	0
239	MD8	SDRAM data bus	I/O	0
240	MD9	SDRAM data bus	I/O	0

11. PACKAGE AND IC BLOCK DIAGRAM

11.1. Main Block

IC101 : C1AB00001966

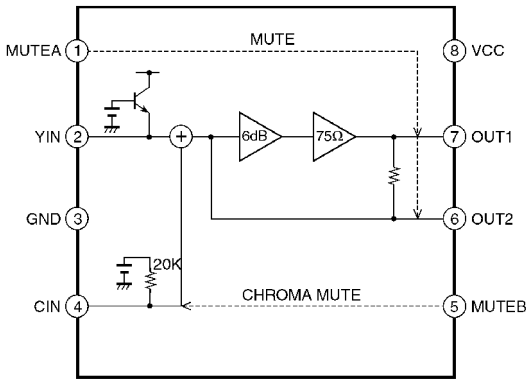

IC205 : YEAMM62429FP

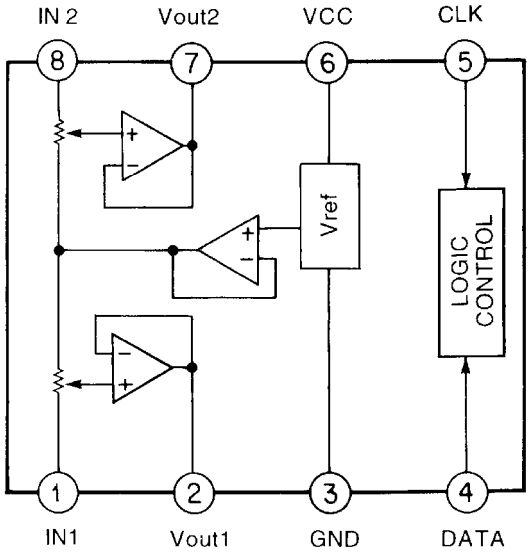

IC208 : C1AB00000459

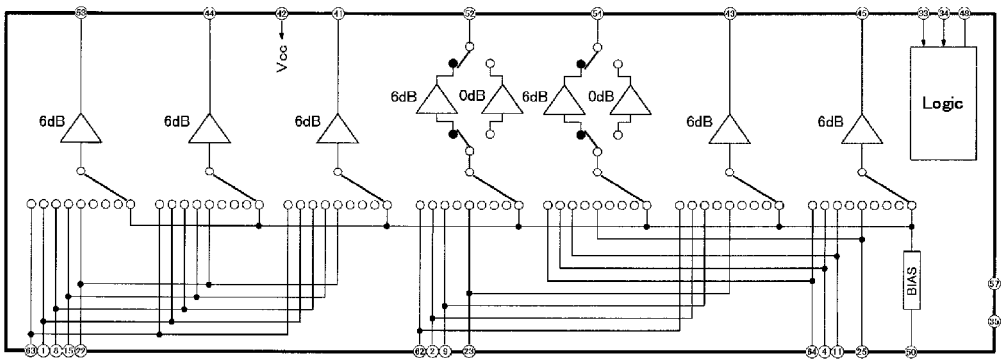

IC513 : C1AB00000350

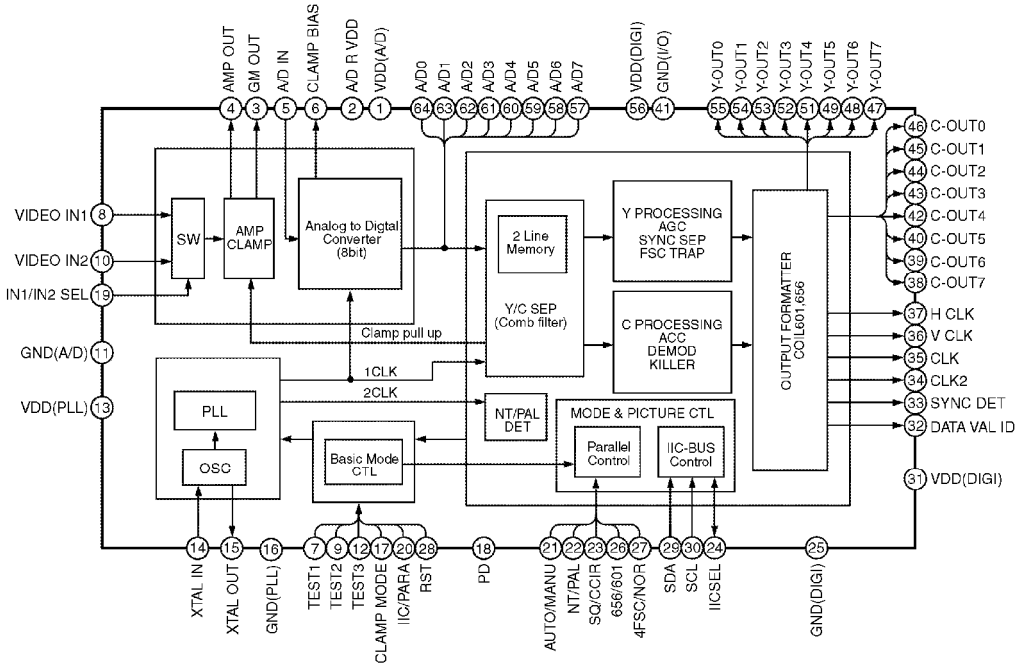

IC516 : YEAMT7SH32UL

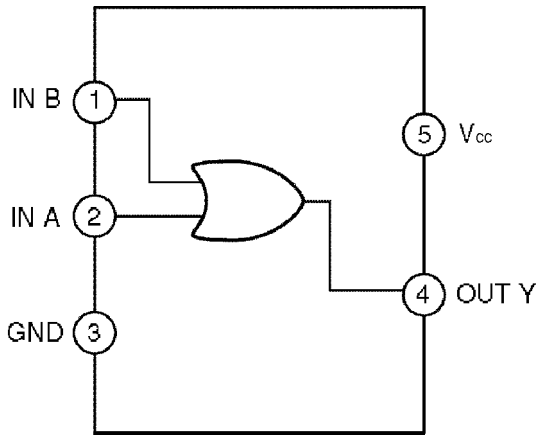

IC606 : MN1382KTX

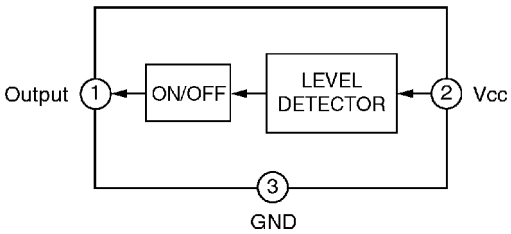

IC609 : C0FBBD000065

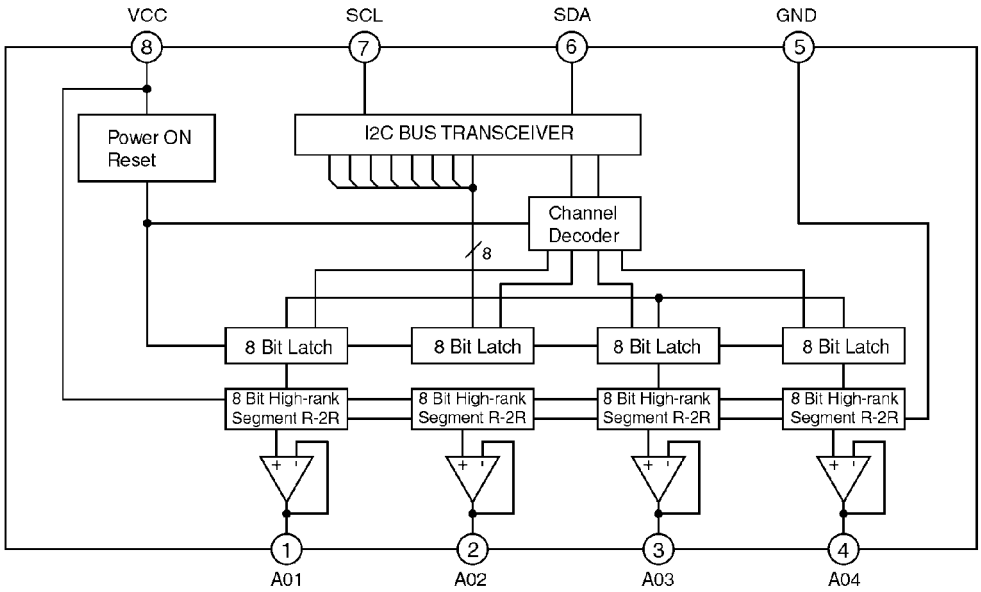

IC701,703,901 : C0DBEKG00001

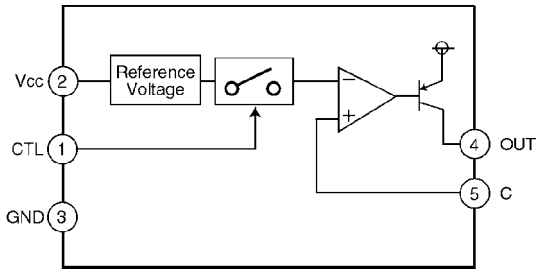

IC710 : YEAMM957BFE1

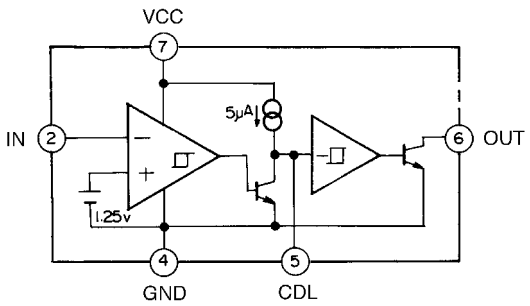

11.2. TFT Block

IC901 : C0DBAZA00013

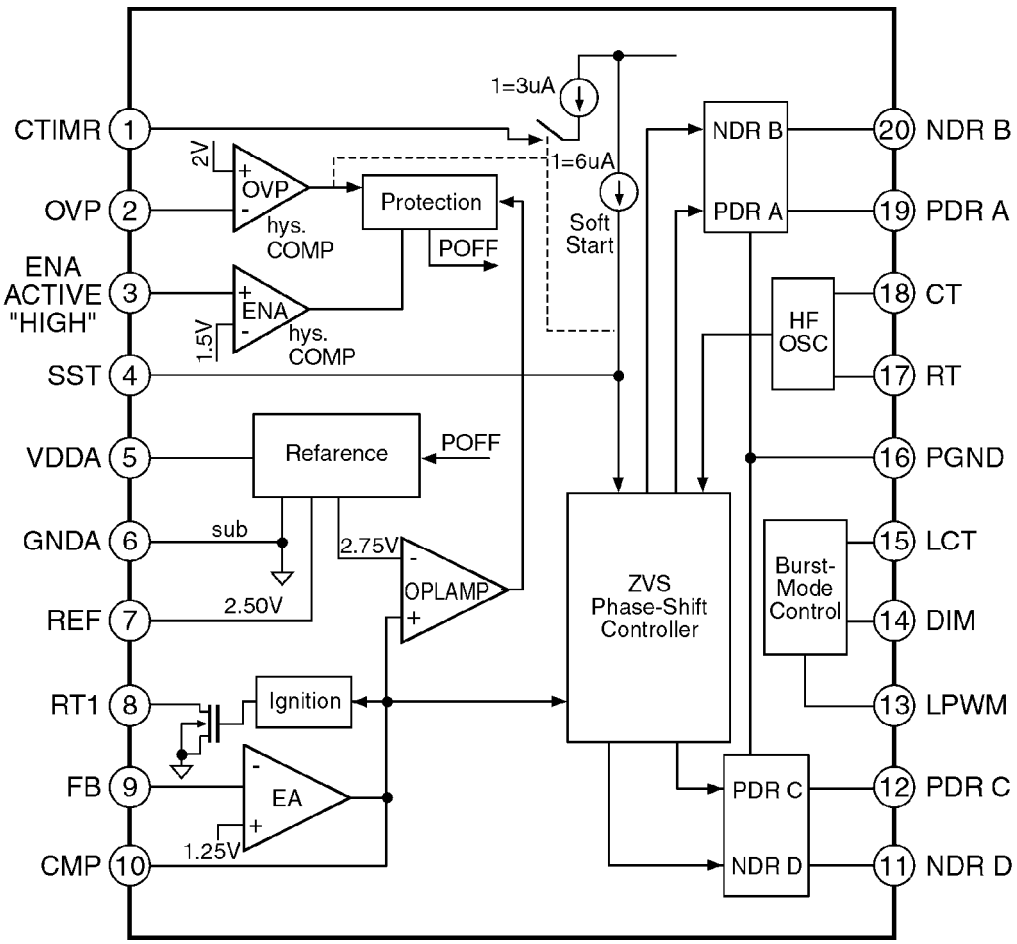

IC902 : AN8049SH-E1

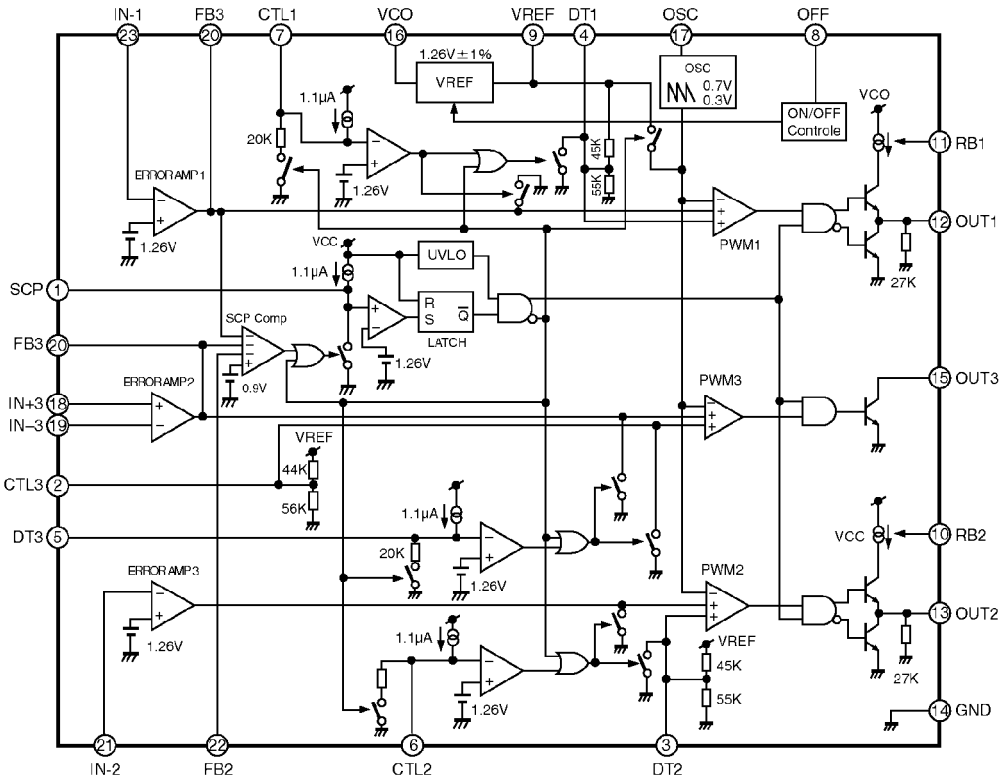

IC903 : YEAMM5237ML

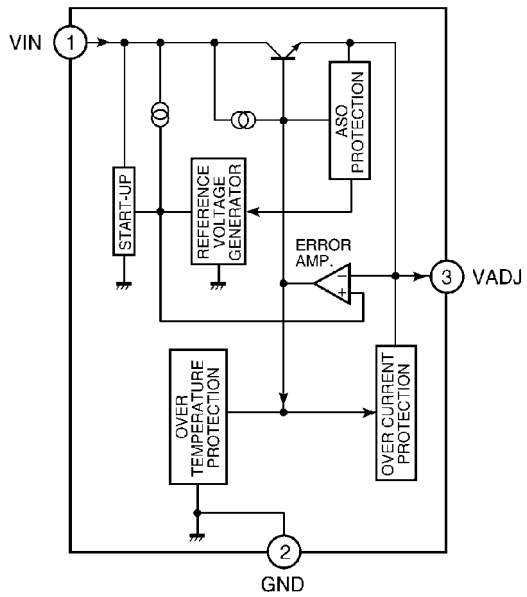

IC910 : C3EBDC000049

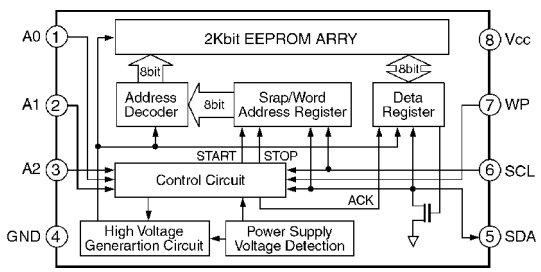

IC911 : PNA4603H

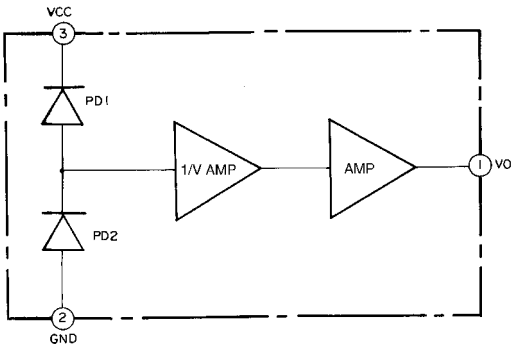

IC907 : AN2526FH

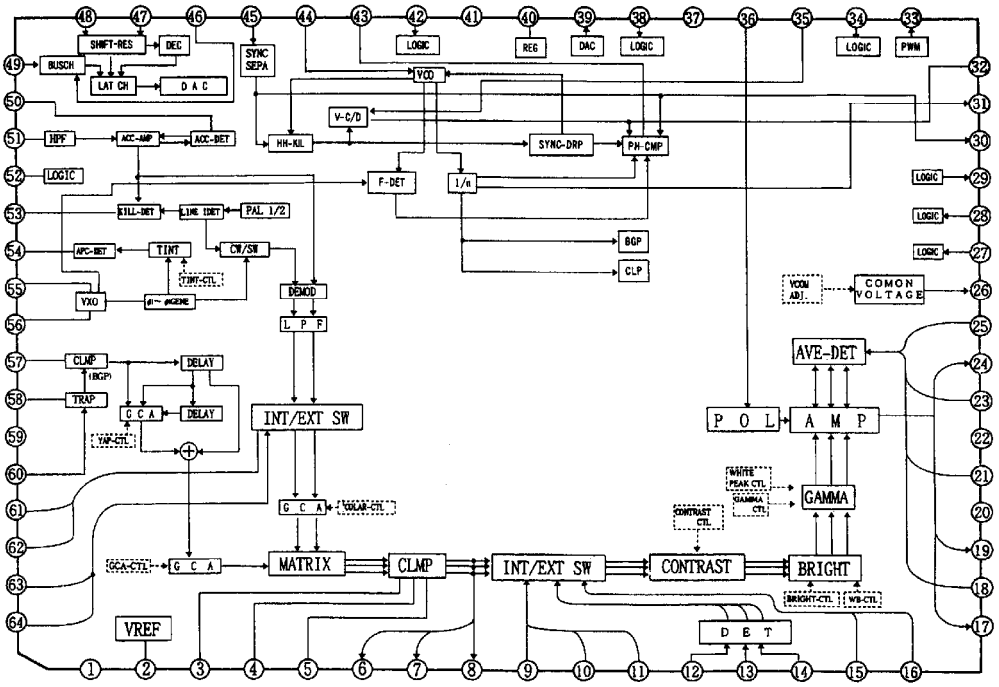

IC909 : C0FBBD000065

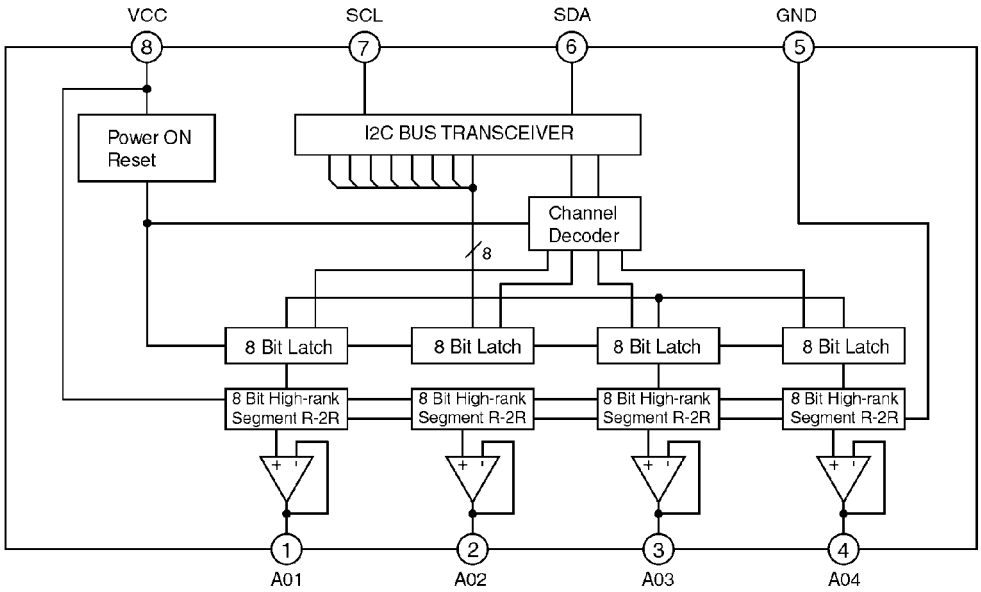

11.3. Display Block

IC1 : C0HBA0000138

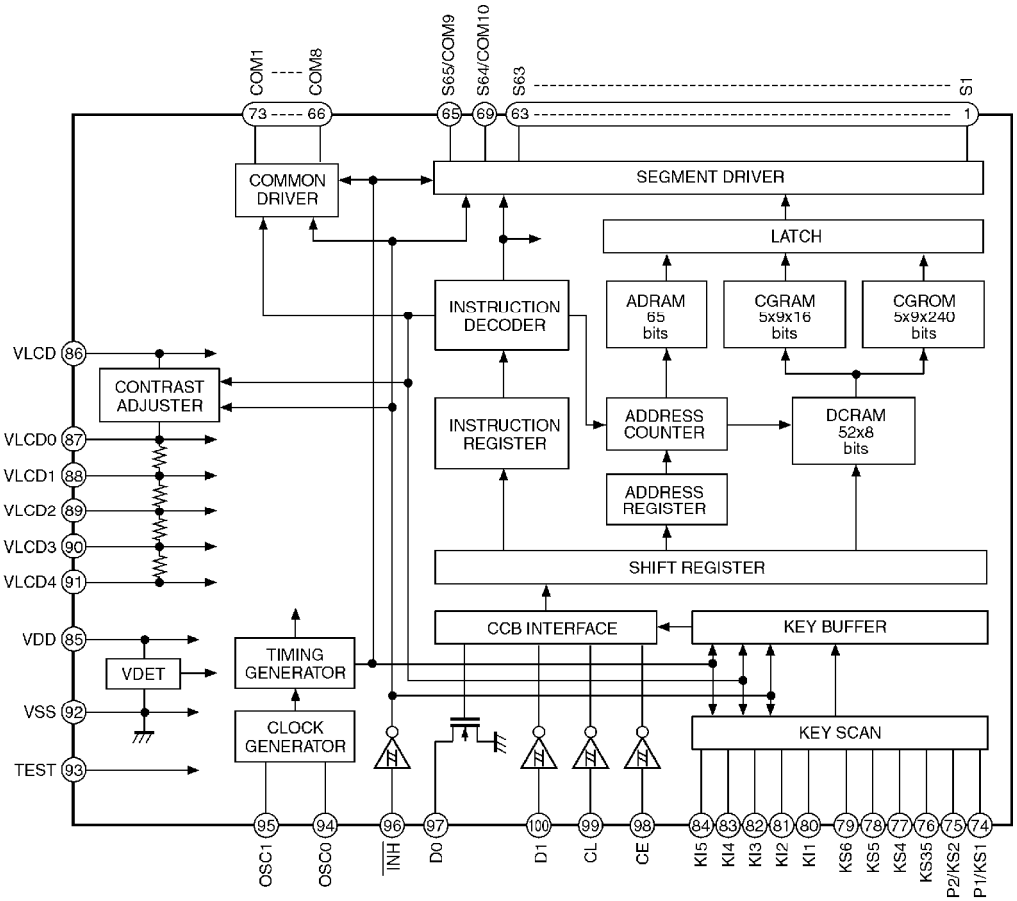

IC2 : B3MBZ0000006

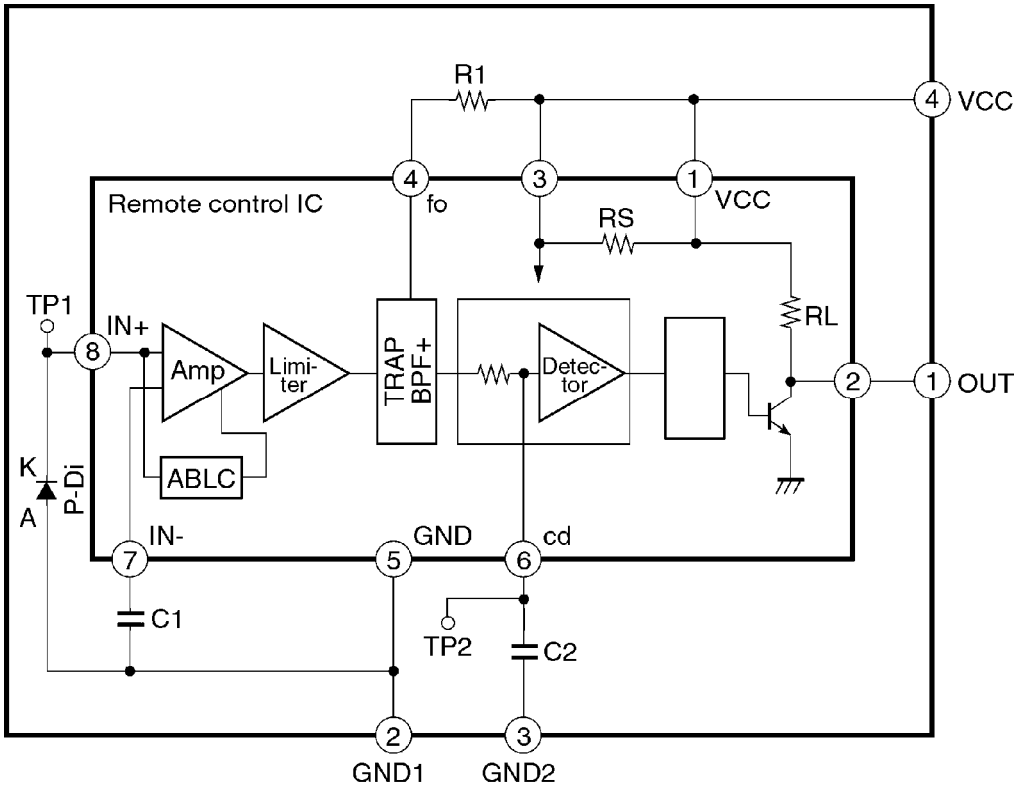

11.4. Radio Block

IC51 : C1BB00000644

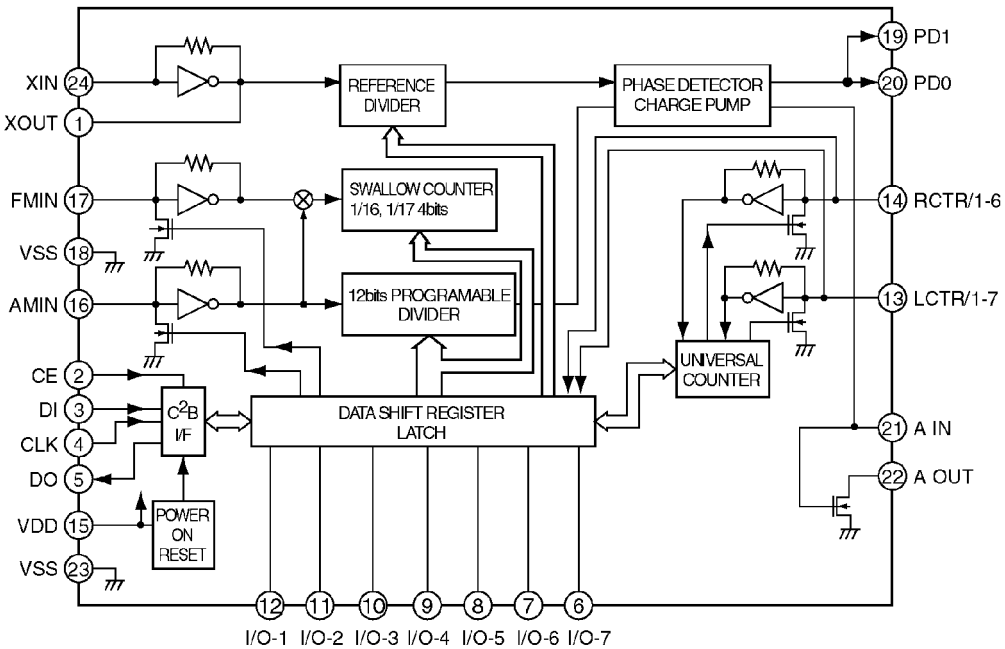

IC205,305,306 : C1BB00000650

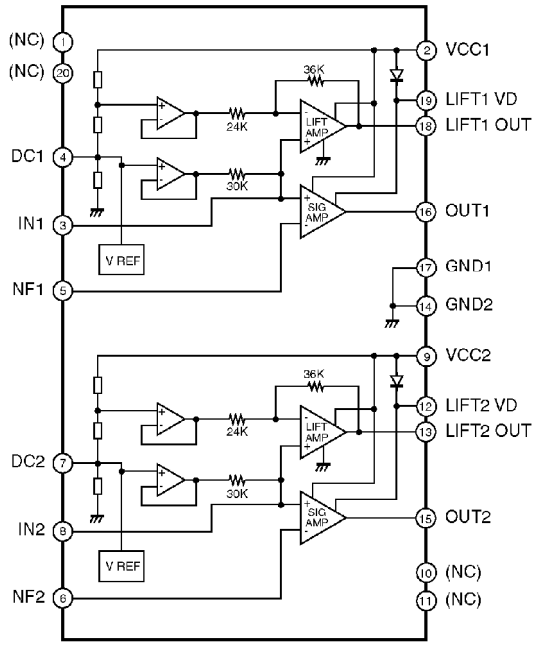

IC602 : C3GBCC000001

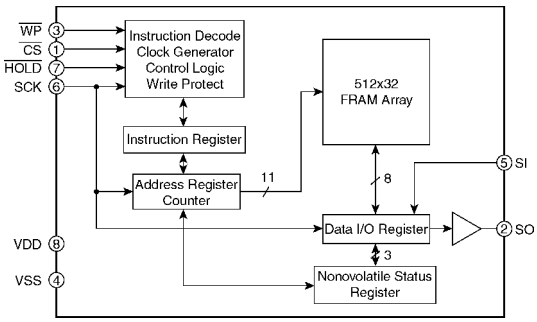

IC603 : C1EB00000072

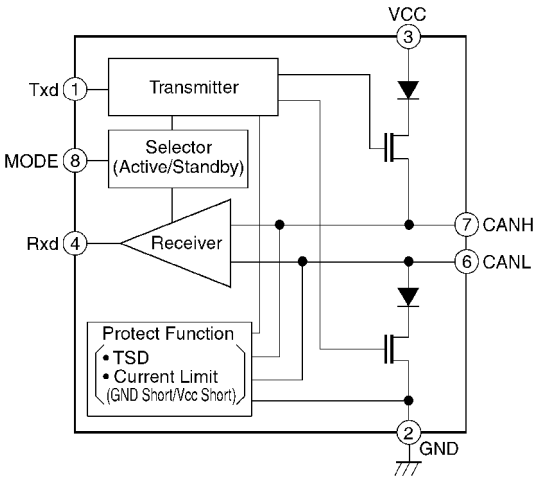

IC606 : AN8065SE1

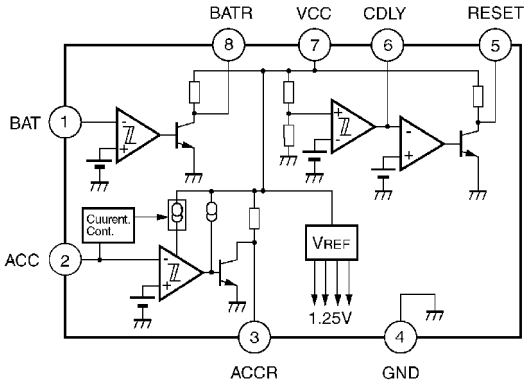

IC702 : YEAMPC2905E1

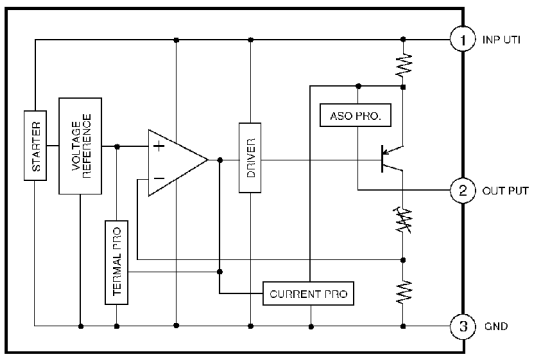

IC703 : C0DBEKG00001

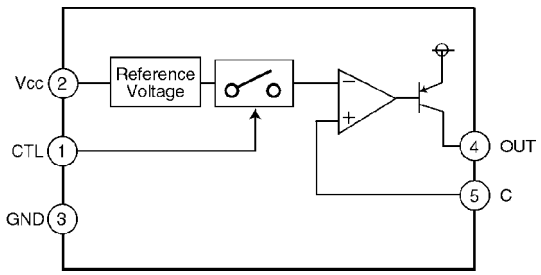

IC607 : C0FBBD000065

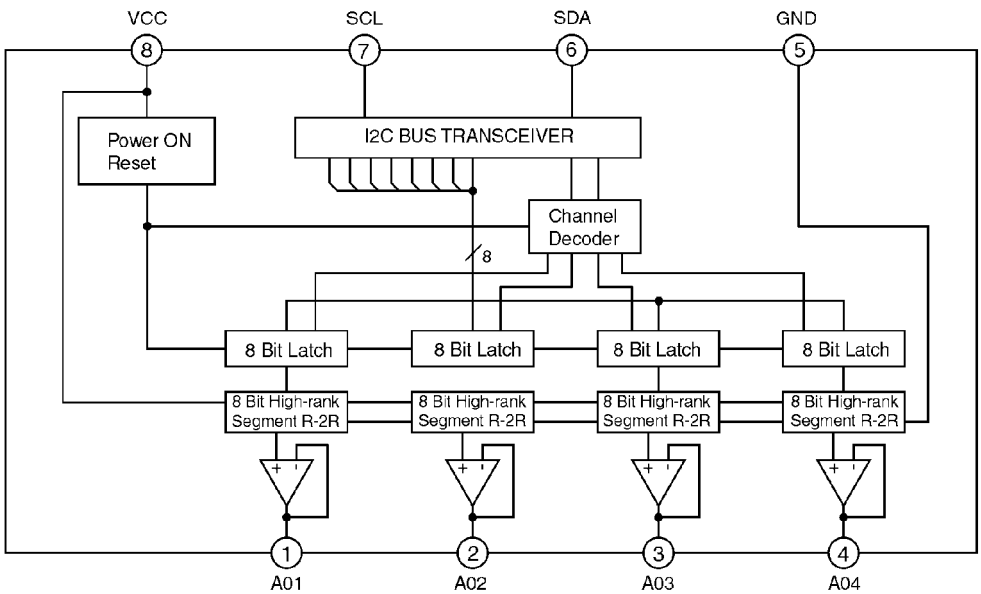

11.5. TV Block

IC101 : AN5186FB

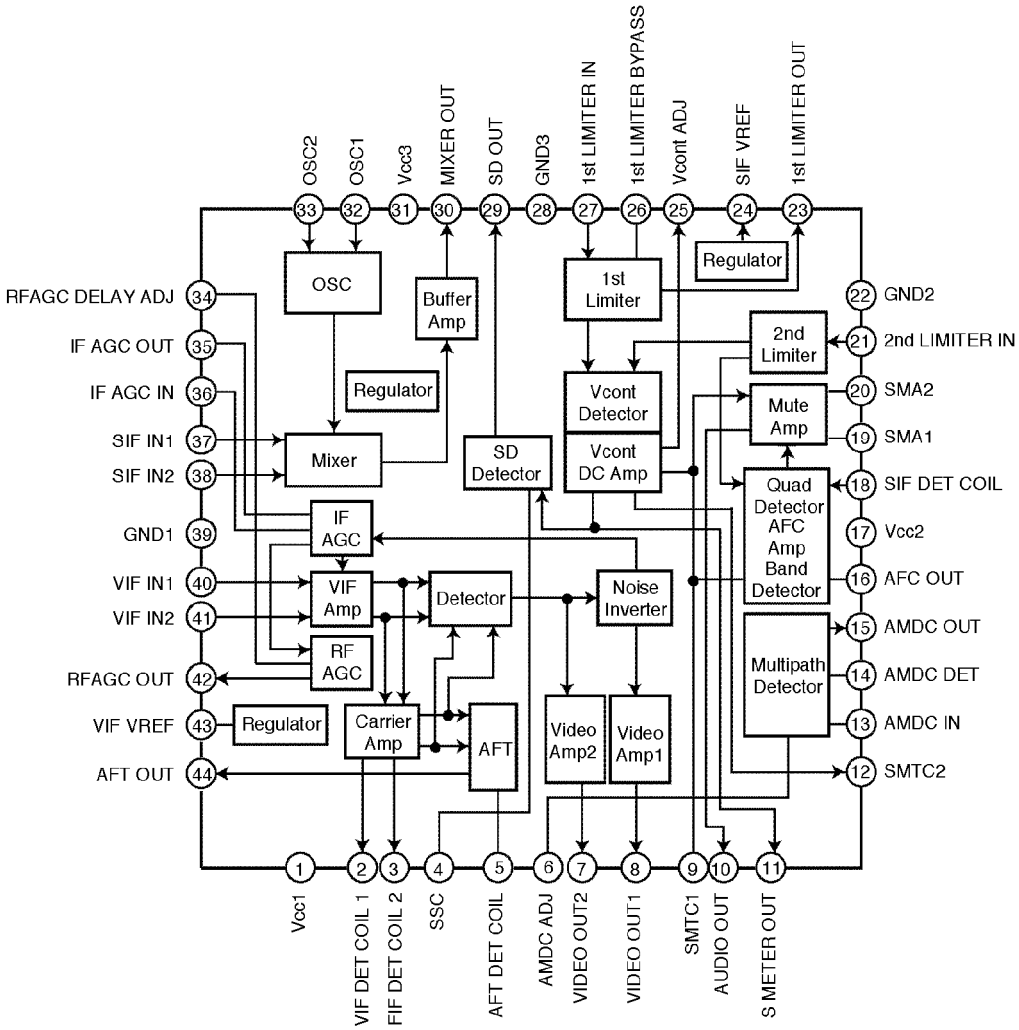

IC102 : YEAMCXA2020M

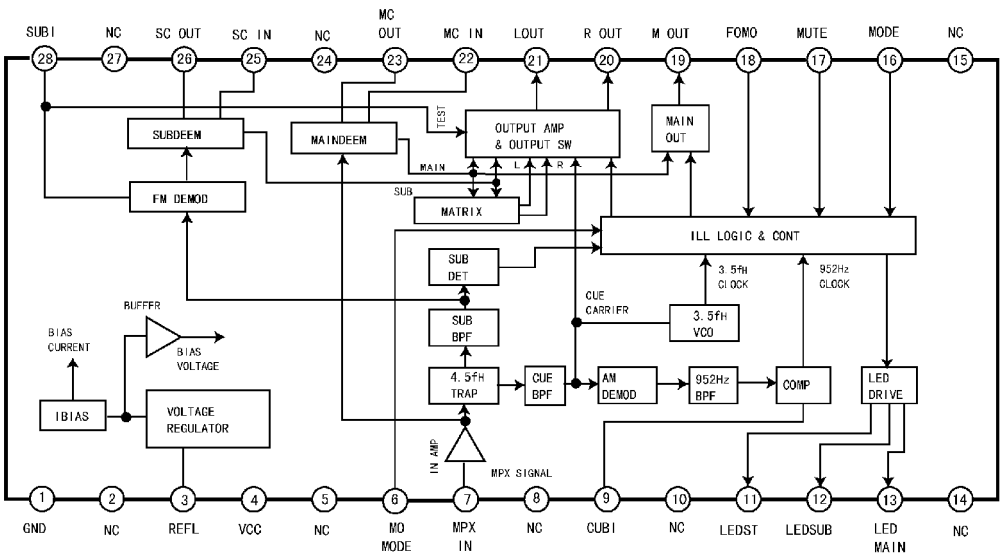

IC104 : YEAMPC2905E1

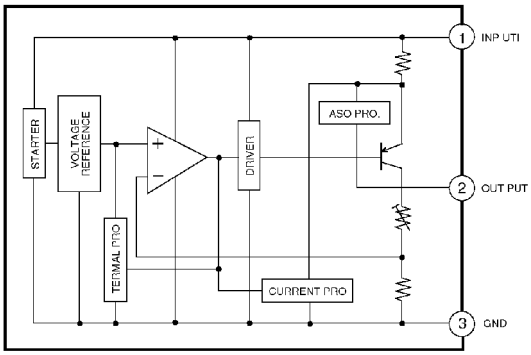

IC110 : YEAMC78L05E2

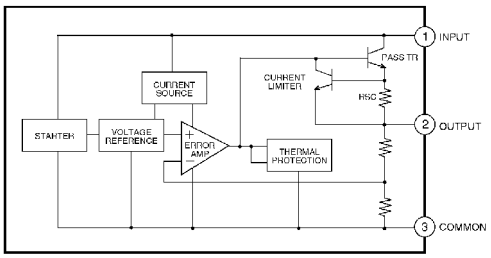

IC107 : C1AB00000459

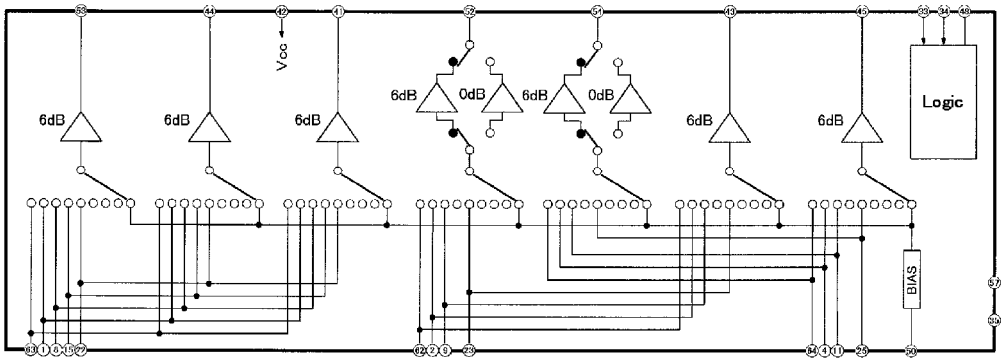

IC710 : C0DBEKG00001

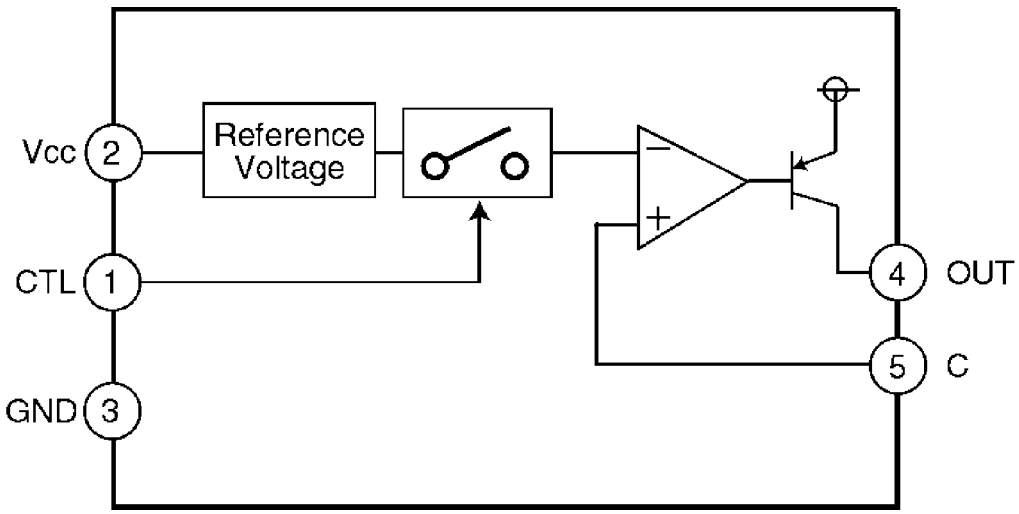

11.6. D-AMP Block

IC307 : AN7190NZ

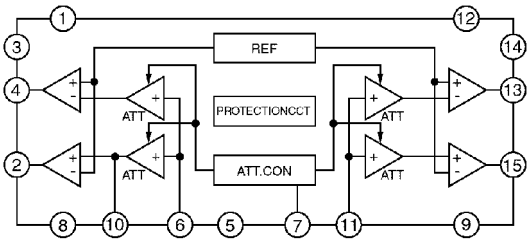

IC702 : YEAMM51945AF

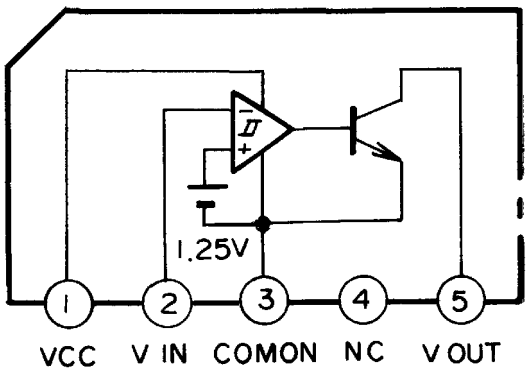

IC701 : C5HAAKH00001

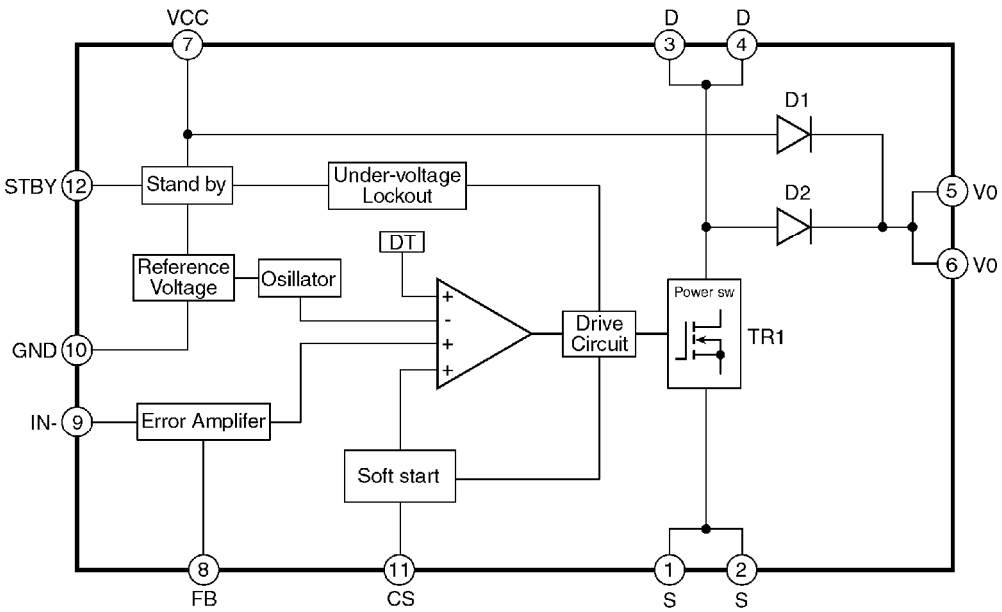

11.7. DVD Deck Block

IC101 : AN8703FH-V

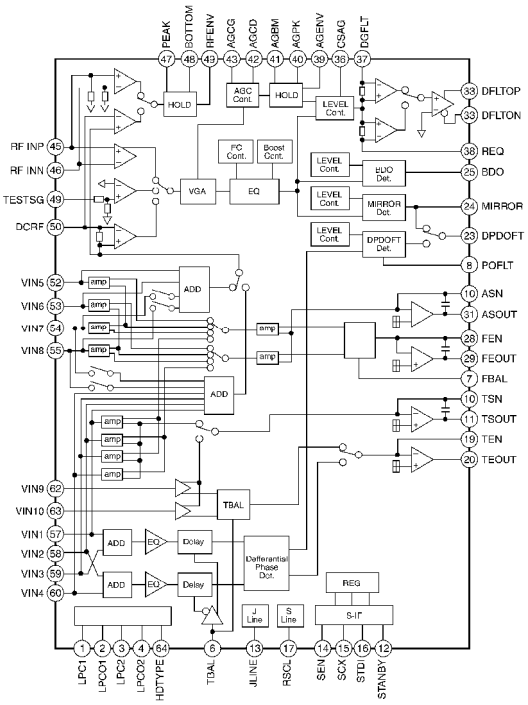

IC271 : YEAMT7ST08UL

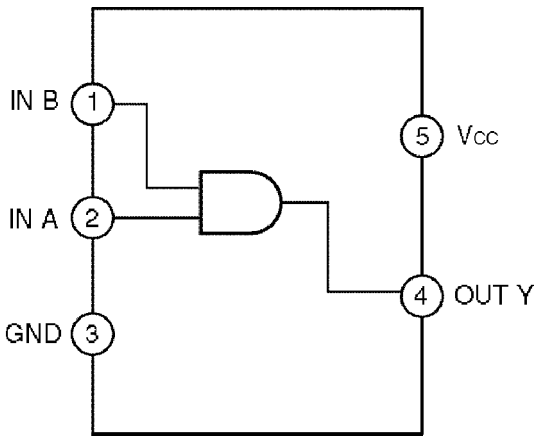

IC275,561 : C0JBAZ001014

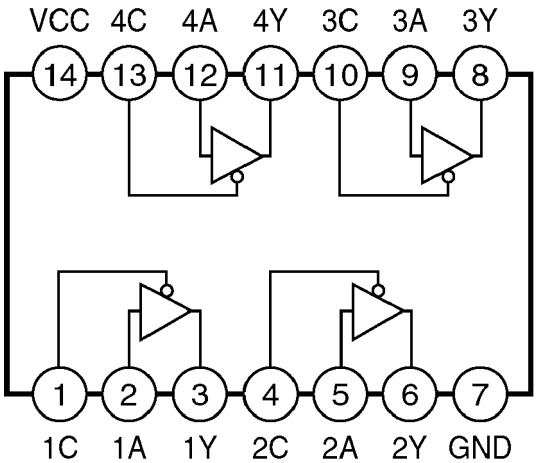

IC311 : C0GBY0000012

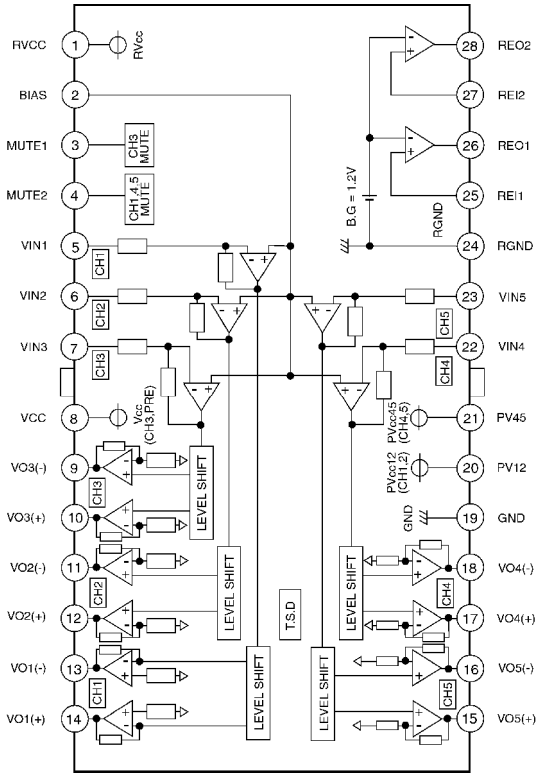

IC321 : C0GBH0000006

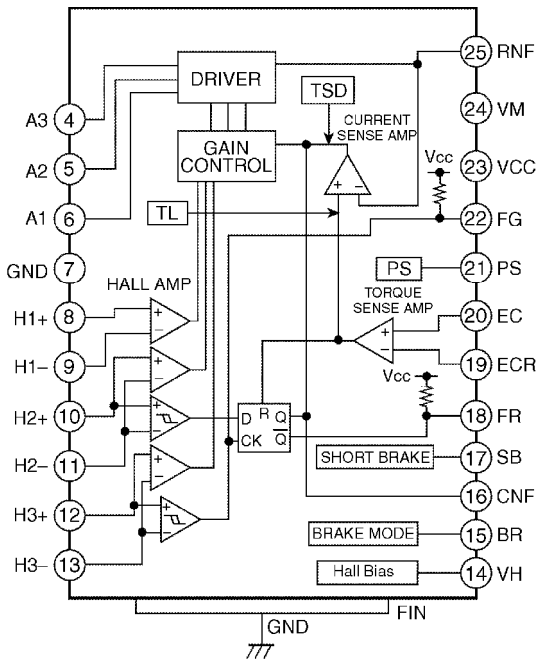

IC411 : YEAMC78L05E2

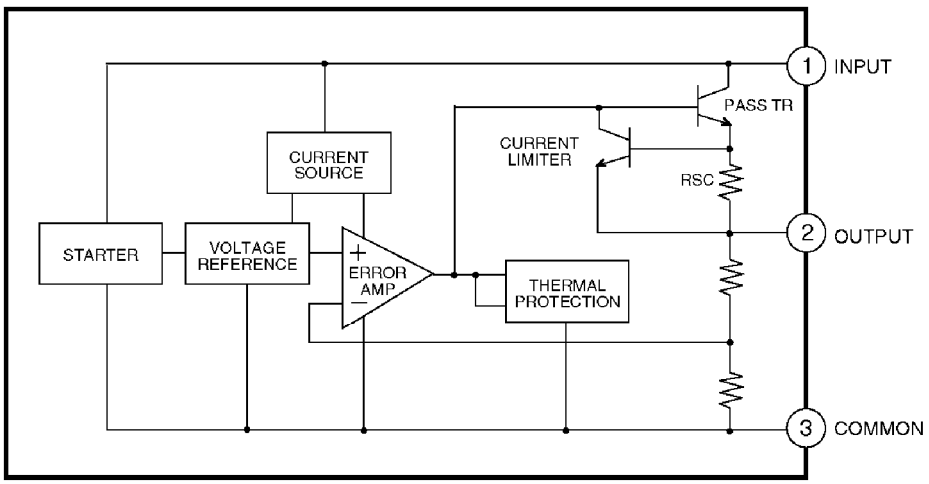

IC431 : C0JBAA000102

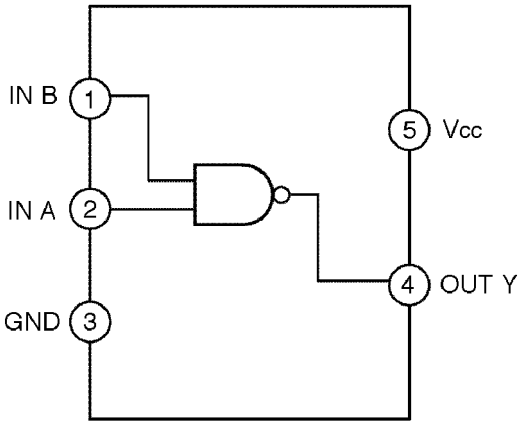

IC441 : MN13821JP

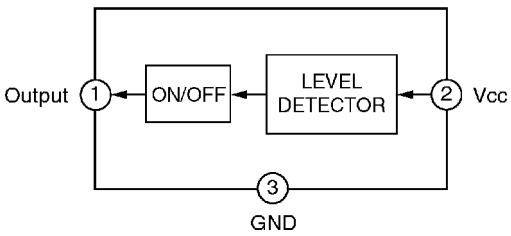

IC652 : C0JBAB000255

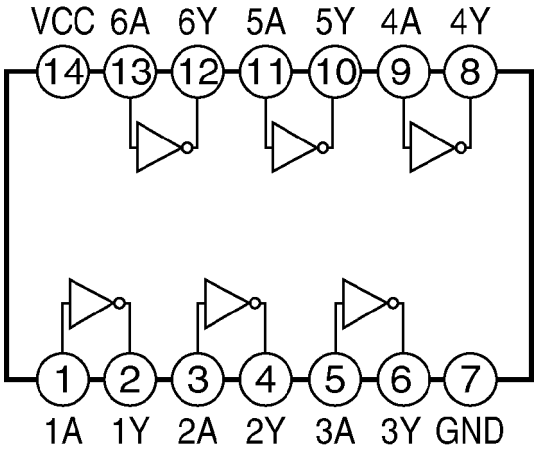

IC621 : C3FBMG000017

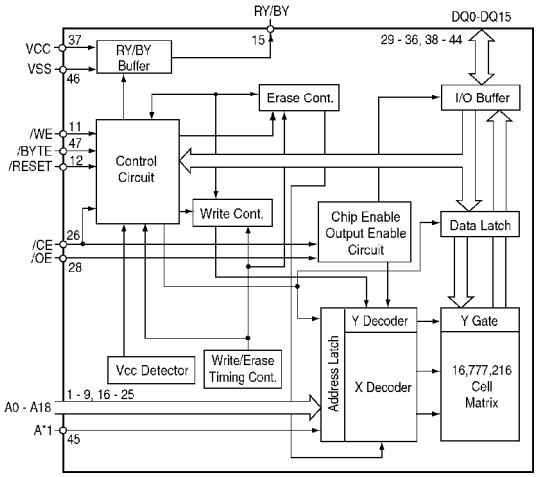

IC651 : C3GBCC000001

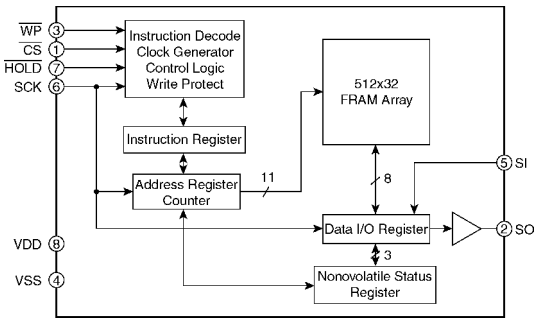

12. REPLACEMENT PARTS LIST [Display Unit]

Notes :

1. **Be sure to make your orders of replacement parts according to this list.**
2. **Important safety notice: Components, identified by ⚠ mark have special characteristics important for safety. When replacing any of these components, use only manufacturer's specified parts.**

3. Location keys in the remarks column indicates the general location of the parts shown in the exploded drawing, as in a road map.
4. The marking (RTL) indicates that Retention Time is limited for this item. After the discontinuation of assembly in production, the item will continue to be available for a specific period of time. The retention period of availability is dependent on the type of assembly, and in accordance with the laws governing part and product retention. After the end of this period, the assembly will no longer be available.

    - Order intake period is basically six months after the first shipment.

Ref. No.	Part No.	Part Name & Description	Remarks
[E9432B] Main Block			
IC's AND TRANSISTORs			
IC51	C0ABBB000090	IC	
IC101	C1AB00001966	IC	
IC102	YEAMT7ST08UL	IC	
IC103	YEAMT7ST08UL	IC	
IC104	YEAMT7ST08UL	IC	
IC105	YEAMT7ST08UL	IC	
IC106	YEAMT7ST08UL	IC	
IC107	YEAMT7ST08UL	IC	
IC202	YEAMPC4074T1	IC	
IC203	C0ABBB000090	IC	
IC204	C0ABBB000090	IC	
IC205	YEAMM62429FP	IC	
IC206	C0FBAK000008	IC	
IC207	C0ABBB000105	IC	
IC208	C1AB00000459	IC	
IC209	C0JBAB000175	IC	
IC210	C1BB00000841	IC	
IC211	C0JBBZ000255	IC	
IC212	C1BB00000849	IC	
IC213	C0FBBK000046	IC	
IC214	YEAMPC4074T1	IC	
IC215	YEAMPC4074T1	IC	
IC216	YEAMPC4074T1	IC	
IC217	C0ABBB000090	IC	
IC218	C3BBKG000081	IC	
IC219	YEAMC78L05E2	IC	
IC401	C0ABBB000090	IC	
IC402	C0ABBB000090	IC	
IC501	C1DB00000516	IC	
IC502	C0JBZZ000314	IC	
IC505	C0ABFA000014	IC	

Ref. No.	Part No.	Part Name & Description	Remarks
IC507	C3ABPJ000056	IC	
IC508	C3ABPG000125	IC	
IC509	C3FBPD000132	IC	
IC512	C0JBAB000175	IC	
IC513	C1AB00000350	IC	
IC516	YEAMT7SH32UL	IC	
IC601	YEAMT7ST08UL	IC	
IC602	YEAMT7ST08UL	IC	
IC603	C2DBJH000021	IC	
IC604	C0JBBZ000285	IC	
IC605	YEAMT7ST08UL	IC	
IC606	MN1382KTX	IC	
IC607	C0JBAZ000279	IC	
IC608	YEAMTC7W14FL	IC	
IC609	C0FBBD000065	IC	
IC610	YEAMT7ST08UL	IC	
IC611	C0JBAA000102	IC	
IC612	C1EB00000072	IC	
IC701	C0DBEKG00001	IC	
IC702	C0ABAB000001	IC	
IC703	C0DBEKG00001	IC	
IC710	YEAMM957BFE1	IC	
IC711	YEAMT7SH14UL	IC	
IC901	C0DBEKG00001	IC	
IC902	C0DBAZZ00044	IC	
IC903	C0DBAZC00013	IC	
IC904	YEAMT7ST08UL	IC	
IC905	YEAMT7ST08UL	IC	
IC906	YEAMT7ST08UL	IC	
Q101	B1GBCFJJ0007	Transistor	
Q102	YEANFP1F3PT1	Transistor	
Q103	B1GBCFJJ0007	Transistor	
Q104	YEANFP1F3PT1	Transistor	
Q202	YEANC323TUTX	Transistor	
Q203	YEANC323TUTX	Transistor	
Q204	YEANC323TUTX	Transistor	
Q205	YEANC2412KTX	Transistor	
Q206	YEANC2412KTX	Transistor	
Q302	YEANC323TUTX	Transistor	
Q303	YEANC323TUTX	Transistor	
Q304	YEANC323TUTX	Transistor	
Q401	YEANC114YUTX	Transistor	
Q402	B1GDCFNN0002	Transistor	
Q404	YEANC114YUTX	Transistor	
Q408	B1GDCFJJ0008	Transistor	
Q409	YEANA124EUTX	Transistor	
Q410	B1GBCFJJ0007	Transistor	
Q411	YEANC314TKTX	Transistor	
Q412	YEANC314TKTX	Transistor	
Q413	YEANC314TKTX	Transistor	
Q414	B1GBCFNN0004	Transistor	
Q415	B1GBCFNN0004	Transistor	
Q416	2SB709TX	Transistor	
Q601	YEANC114YUTX	Transistor	

Ref. No.	Part No.	Part Name & Description	Remarks
Q602	YEANC114YUTX	Transistor	
Q701	YEAND1899ZE1	Transistor	
Q702	2SD601TX	Transistor	
Q703	YEANFP1F3PT1	Transistor	
Q704	B1BDCG000008	Transistor	
Q705	B1GBCFJJ0007	Transistor	
Q706	YEANA1647ZKT	Transistor	
Q707	B1GBCFJJ0007	Transistor	
Q708	YEANFP1F3PT1	Transistor	
Q709	YEANHQ1F3PT1	Transistor	
Q710	B1GBCFJJ0007	Transistor	
Q711	2SD601TX	Transistor	
Q712	B1BDCG000008	Transistor	
Q713	B1GBCFJJ0007	Transistor	
Q714	YEAND1899ZE1	Transistor	
Q901	B1DFGD000020	Transistor	
Q902	B1DFGD000020	Transistor	
Q903	B1DHGD000005	Transistor	
Q904	B1BDCG000008	Transistor	
Q905	B1BDCG000008	Transistor	
Q906	B1BDCG000008	Transistor	
Q907	B1GBCFJJ0007	Transistor	
Q908	YEANFP1F3PT1	Transistor	
Q910	2SB709TX	Transistor	
Q911	YEANC114YUTX	Transistor	
Q912	2SD601TX	Transistor	
Q913	2SB709TX	Transistor	
Q914	B1BDCG000008	Transistor	
Q915	B1BDCG000008	Transistor	
Q916	B1ABCF000042	Transistor	
Q917	B1ABCF000042	Transistor	
Q918	B1BDCG000008	Transistor	
Q919	B1DHGD000005	Transistor	
Q920	B1GBCFJJ0007	Transistor	
Q921	B1GBCFJJ0007	Transistor	
Q922	B1GBCFJJ0007	Transistor	
Q923	B1GBCFJJ0007	Transistor	
Q924	B1GBCFJJ0007	Transistor	
DIODEs			
D105	MA8056LMHTX	Diode	
D106	MA8056LMHTX	Diode	
D107	MA8056LMHTX	Diode	
D108	MAZ80390LL	Diode	
D116	MA8056LMHTX	Diode	
D117	MA8056LMHTX	Diode	
D401	YEADDAM3MA47	Diode	
D402	B0ACCK000005	Diode	
D404	B0ADCJ000025	Diode	
D405	B0ADCJ000025	Diode	
D406	B0ADCJ000025	Diode	
D407	B0ADCJ000007	Diode	
D601	MA8056LMHTX	Diode	

Ref. No.	Part No.	Part Name & Description	Remarks
D602	MA2J72900L	Diode	
D603	MA2J72900L	Diode	
D604	MA2J72900L	Diode	
D701	B0ACCK000005	Diode	
D702	YEADEC10DS1	Diode	
D703	YEADSR1544TL	Diode	
D704	YEADRD33M2T2	Diode	
D705	B0ACCK000005	Diode	
D706	MA2J72900L	Diode	
D707	YEADRB081L20	Diode	
D709	YEADRB081L20	Diode	
D710	YEADEC10DS1	Diode	
D711	B3AEB0000037	Diode	
D712	YEADRB081L20	Diode	
D713	YEADEC10DS1	Diode	
D901	B0JCQD000002	Diode	
D902	YEADRB081L20	Diode	
D903	B0JCQD000002	Diode	
D904	B0JCQD000002	Diode	
D905	YEADRB081L20	Diode	
D907	B0JCQD000002	Diode	
D908	B0JCQD000002	Diode	
D909	B0JCQD000002	Diode	
D910	B0JCQD000002	Diode	
D911	YEADRB081L20	Diode	
D912	B0ACCK000005	Diode	
D913	B0ACCK000005	Diode	
CAPACITORs			
C51	F1H1H100A226	Ceramic, 10PF 50WV	
C52	F1K1C1060001	Ceramic, 10 μF 16WV	
C53	F1H1H100A226	Ceramic, 10PF 50WV	
C54	F1K1C1060001	Ceramic, 10 μF 16WV	
C55	F1K1C1060001	Ceramic, 10 μF 16WV	
C56	YECUZ1C104KX	Ceramic, 0.1 μF 16WV	
C57	F1H1H100A226	Ceramic, 10PF 50WV	
C59	F1H1H100A226	Ceramic, 10PF 50WV	
C60	F1K1C1060001	Ceramic, 10 μF 16WV	
C63	F1K1C1060001	Ceramic, 10 μF 16WV	
C64	YECUV1C225KX	Ceramic, 2.2 μF 16WV	
C65	EEVFC1C100R	Electrolytic, 10 μF 16WV	
C66	YECUV1C225KX	Ceramic, 2.2 μF 16WV	
C67	EEFUD0G121R	Electrolytic, 120 μF 4WV	
C68	YECUV1C225KX	Ceramic, 2.2 μF 16WV	
C69	EEFUD0G121R	Electrolytic, 120 μF 4WV	
C70	YECUV1C225KX	Ceramic, 2.2 μF 16WV	
C71	EEFUD0J101R	Electrolytic, 100 μF 6.3WV	

Ref. No.	Part No.	Part Name & Description	Remarks
C72	YECUZ1C104KX	Ceramic, 0.1 μ F 16WV	
C74	YECUZ1C104KX	Ceramic, 0.1 μ F 16WV	
C81	F1J0J1060007	Ceramic, 10 μ F 6.3WV	
C82	YECUV1C225KX	Ceramic, 2.2 μ F 16WV	
C83	YECUV1C225KX	Ceramic, 2.2 μ F 16WV	
C84	YECUZ1C104KX	Ceramic, 0.1 μ F 16WV	
C85	YECUZ1C104KX	Ceramic, 0.1 μ F 16WV	
C86	YECUZ1C104KX	Ceramic, 0.1 μ F 16WV	
C87	YECUZ1C104KX	Ceramic, 0.1 μ F 16WV	
C101	EEFCD0J470R	Electrolytic, 47 μ F 6.3WV	
C102	YECUZ1C104KX	Ceramic, 0.1 μ F 16WV	
C103	EEFUD0G121R	Electrolytic, 120 μ F 4WV	
C104	YECUZ1C104KX	Ceramic, 0.1 μ F 16WV	
C105	F1J1C1050013	Ceramic, 1 μ F 16WV	
C106	YECUZ1C104KX	Ceramic, 0.1 μ F 16WV	
C107	F1J0J1060007	Ceramic, 10 μ F 6.3WV	
C108	YECUZ1C104KX	Ceramic, 0.1 μ F 16WV	
C110	YECUZ1C104KX	Ceramic, 0.1 μ F 16WV	
C111	YECUZ1C104KX	Ceramic, 0.1 μ F 16WV	
C112	F1K1C1060001	Ceramic, 10 μ F 16WV	
C113	YECUZ1C104KX	Ceramic, 0.1 μ F 16WV	
C114	F1J0J1060007	Ceramic, 10 μ F 6.3WV	
C115	YECUZ1C104KX	Ceramic, 0.1 μ F 16WV	
C116	F1K1C1060001	Ceramic, 10 μ F 16WV	
C117	YECUZ1C104KX	Ceramic, 0.1 μ F 16WV	
C118	YECUZ1C104KX	Ceramic, 0.1 μ F 16WV	
C119	YECUU1A226ZF	Tantalum, 22 μ F 10WV	
C120	YECUZ1C104KX	Ceramic, 0.1 μ F 16WV	
C121	F1J0J1060007	Ceramic, 10 μ F 6.3WV	
C124	F1K1C1060001	Ceramic, 10 μ F 16WV	
C125	YECUZ1C104KX	Ceramic, 0.1 μ F 16WV	
C126	YECUZ1C104KX	Ceramic, 0.1 μ F 16WV	
C127	YECUZ1C104KX	Ceramic, 0.1 μ F 16WV	
C128	YECUZ1C104KX	Ceramic, 0.1 μ F 16WV	
C129	F1J0J1060007	Ceramic, 10 μ F 6.3WV	
C130	YECUZ1C104KX	Ceramic, 0.1 μ F 16WV	
C131	YECUZ1C104KX	Ceramic, 0.1 μ F 16WV	
C132	YECUZ1C104KX	Ceramic, 0.1 μ F 16WV	
C201	YECUZ1H560JC	Ceramic, 56PF 50WV	

Ref. No.	Part No.	Part Name & Description	Remarks
C202	F1K1C1060001	Ceramic, 10 μ F 16WV	
C203	F1K1C1060001	Ceramic, 10 μ F 16WV	
C204	YECUZ1H560JC	Ceramic, 56PF 50WV	
C206	F1K1C1060001	Ceramic, 10 μ F 16WV	
C216	F1K1C1060001	Ceramic, 10 μ F 16WV	
C217	YECUZ1H560JC	Ceramic, 56PF 50WV	
C218	F1K1C1060001	Ceramic, 10 μ F 16WV	
C219	YECUZ1H560JC	Ceramic, 56PF 50WV	
C220	F1K1C1060001	Ceramic, 10 μ F 16WV	
C221	YECUZ1H560JC	Ceramic, 56PF 50WV	
C222	YECUZ1H560JC	Ceramic, 56PF 50WV	
C223	F1K1C1060001	Ceramic, 10 μ F 16WV	
C224	F1K1C1060001	Ceramic, 10 μ F 16WV	
C226	YECUZ1H560JC	Ceramic, 56PF 50WV	
C227	F1K1C1060001	Ceramic, 10 μ F 16WV	
C228	YECUZ1H560JC	Ceramic, 56PF 50WV	
C229	YECUZ1H560JC	Ceramic, 56PF 50WV	
C230	F1K1C1060001	Ceramic, 10 μ F 16WV	
C231	F1K1C1060001	Ceramic, 10 μ F 16WV	
C233	YECUZ1H560JC	Ceramic, 56PF 50WV	
C234	F1K1C1060001	Ceramic, 10 μ F 16WV	
C235	YECUZ1H560JC	Ceramic, 56PF 50WV	
C236	YECUZ1H560JC	Ceramic, 56PF 50WV	
C237	F1K1C1060001	Ceramic, 10 μ F 16WV	
C238	F1K1C1060001	Ceramic, 10 μ F 16WV	
C240	YECUZ1H560JC	Ceramic, 56PF 50WV	
C241	F1K1C1060001	Ceramic, 10 μ F 16WV	
C242	F1J1A2250004	Ceramic, 2.2 μ F 10WV	
C243	F1K1C1060001	Ceramic, 10 μ F 16WV	
C245	YECUZ1H121JC	Ceramic, 120PF 50WV	
C248	F1J1C1050013	Ceramic, 1 μ F 16WV	
C249	F1J1C1050013	Ceramic, 1 μ F 16WV	
C250	F1J1C1050013	Ceramic, 1 μ F 16WV	
C252	F1J1C1050013	Ceramic, 1 μ F 16WV	
C253	YECUZ1C104KX	Ceramic, 0.1 μ F 16WV	
C254	F1K1C1060001	Ceramic, 10 μ F 16WV	
C255	F1K1C1060001	Ceramic, 10 μ F 16WV	
C256	YECUZ1C104KX	Ceramic, 0.1 μ F 16WV	
C257	F1K1C1060001	Ceramic, 10 μ F 16WV	
C258	YECUZ1C104KX	Ceramic, 0.1 μ F 16WV	
C259	F1K1C1060001	Ceramic, 10 μ F 16WV	
C260	YECUZ1C104KX	Ceramic, 0.1 μ F 16WV	

Ref. No.	Part No.	Part Name & Description	Remarks
C261	F1K1C1060001	Ceramic, 10 μF 16WV	
C262	F1K1C1060001	Ceramic, 10 μF 16WV	
C263	YECUZ1C104KX	Ceramic, 0.1 μF 16WV	
C264	F1J0J1060007	Ceramic, 10 μF 6.3WV	
C265	YECUZ1C104KX	Ceramic, 0.1 μF 16WV	
C266	F1J0J1060007	Ceramic, 10 μF 6.3WV	
C267	YECUZ1C104KX	Ceramic, 0.1 μF 16WV	
C268	YECUZ1C104KX	Ceramic, 0.1 μF 16WV	
C269	YECUZ1C104KX	Ceramic, 0.1 μF 16WV	
C270	YECUZ1C104KX	Ceramic, 0.1 μF 16WV	
C271	F1K1C1060001	Ceramic, 10 μF 16WV	
C272	F1K1C1060001	Ceramic, 10 μF 16WV	
C273	YECUZ1C104KX	Ceramic, 0.1 μF 16WV	
C274	YECUZ1C104KX	Ceramic, 0.1 μF 16WV	
C275	F1K1C1060001	Ceramic, 10 μF 16WV	
C276	YECUZ1C104KX	Ceramic, 0.1 μF 16WV	
C277	YECUZ1C104KX	Ceramic, 0.1 μF 16WV	
C278	F1K1C1060001	Ceramic, 10 μF 16WV	
C279	F1K1C1060001	Ceramic, 10 μF 16WV	
C280	F1K1C1060001	Ceramic, 10 μF 16WV	
C281	YECUZ1C104KX	Ceramic, 0.1 μF 16WV	
C282	F1K1C1060001	Ceramic, 10 μF 16WV	
C283	YECUZ1C104KX	Ceramic, 0.1 μF 16WV	
C285	YECUZ1C104KX	Ceramic, 0.1 μF 16WV	
C286	F1J0J1060007	Ceramic, 10 μF 6.3WV	
C288	F1J0J1060007	Ceramic, 10 μF 6.3WV	
C289	F1J0J1060007	Ceramic, 10 μF 6.3WV	
C290	YECUZ1C104KX	Ceramic, 0.1 μF 16WV	
C291	F1K1C1060001	Ceramic, 10 μF 16WV	
C292	YECUZ1C104KX	Ceramic, 0.1 μF 16WV	
C293	YECUZ1C104KX	Ceramic, 0.1 μF 16WV	
C294	F1J0J1060007	Ceramic, 10 μF 6.3WV	
C295	F1J0J1060007	Ceramic, 10 μF 6.3WV	
C296	F1J0J1060007	Ceramic, 10 μF 6.3WV	
C297	YECUZ1C104KX	Ceramic, 0.1 μF 16WV	
C298	YECUZ1C104KX	Ceramic, 0.1 μF 16WV	
C299	EEFUD0G121R	Electrolytic, 120 μF 4WV	
C301	YECUZ1H560JC	Ceramic, 56PF 50WV	
C302	F1K1C1060001	Ceramic, 10 μF 16WV	

Ref. No.	Part No.	Part Name & Description	Remarks
C303	F1K1C1060001	Ceramic, 10 μ F 16WV	
C304	YECUZ1H560JC	Ceramic, 56PF 50WV	
C306	F1K1C1060001	Ceramic, 10 μ F 16WV	
C316	F1K1C1060001	Ceramic, 10 μ F 16WV	
C317	YECUZ1H560JC	Ceramic, 56PF 50WV	
C318	F1K1C1060001	Ceramic, 10 μ F 16WV	
C319	YECUZ1H560JC	Ceramic, 56PF 50WV	
C320	F1K1C1060001	Ceramic, 10 μ F 16WV	
C321	YECUZ1H560JC	Ceramic, 56PF 50WV	
C322	YECUZ1H560JC	Ceramic, 56PF 50WV	
C323	F1K1C1060001	Ceramic, 10 μ F 16WV	
C324	F1K1C1060001	Ceramic, 10 μ F 16WV	
C326	YECUZ1H560JC	Ceramic, 56PF 50WV	
C327	F1K1C1060001	Ceramic, 10 μ F 16WV	
C328	YECUZ1H560JC	Ceramic, 56PF 50WV	
C329	YECUZ1H560JC	Ceramic, 56PF 50WV	
C330	F1K1C1060001	Ceramic, 10 μ F 16WV	
C331	F1K1C1060001	Ceramic, 10 μ F 16WV	
C333	YECUZ1H560JC	Ceramic, 56PF 50WV	
C334	F1K1C1060001	Ceramic, 10 μ F 16WV	
C335	YECUZ1H560JC	Ceramic, 56PF 50WV	
C336	YECUZ1H560JC	Ceramic, 56PF 50WV	
C337	F1K1C1060001	Ceramic, 10 μ F 16WV	
C338	F1K1C1060001	Ceramic, 10 μ F 16WV	
C340	YECUZ1H560JC	Ceramic, 56PF 50WV	
C341	F1K1C1060001	Ceramic, 10 μ F 16WV	
C342	F1J1A2250004	Ceramic, 2.2 μ F 10WV	
C343	F1K1C1060001	Ceramic, 10 μ F 16WV	
C345	YECUZ1H121JC	Ceramic, 120PF 50WV	
C348	F1J1C1050013	Ceramic, 1 μ F 16WV	
C349	F1J1C1050013	Ceramic, 1 μ F 16WV	
C350	F1J1C1050013	Ceramic, 1 μ F 16WV	
C352	F1J1C1050013	Ceramic, 1 μ F 16WV	
C353	YECUZ1C104KX	Ceramic, 0.1 μ F 16WV	
C354	F1H0J1050010	Ceramic, 1 μ F 6.3WV	
C355	F1H0J1050010	Ceramic, 1 μ F 6.3WV	
C356	YECUZ1C104KX	Ceramic, 0.1 μ F 16WV	
C357	YECUZ1C104KX	Ceramic, 0.1 μ F 16WV	
C358	EEFUD0G121R	Electrolytic, 120 μ F 4WV	
C359	EEFUD0G121R	Electrolytic, 120 μ F 4WV	
C360	F1H0J1050010	Ceramic, 1 μ F 6.3WV	
C361	F1H1H2200007	Ceramic, 22PF 50WV	
C362	YECUZ1C104KX	Ceramic, 0.1 μ F 16WV	

Ref. No.	Part No.	Part Name & Description	Remarks
C363	F1H1H2200007	Ceramic, 22PF 50WV	
C364	YECUZ1C104KX	Ceramic, 0.1 μF 16WV	
C365	YECUZ1H472KX	Ceramic, 4700PF 50WV	
C366	YECUZ1H471KX	Ceramic, 470PF 50WV	
C367	YECUZ1C104KX	Ceramic, 0.1 μF 16WV	
C368	F1H0J1050010	Ceramic, 1 μF 6.3WV	
C369	YECUZ1C104KX	Ceramic, 0.1 μF 16WV	
C370	F1H0J1050010	Ceramic, 1 μF 6.3WV	
C371	YECUZ1C104KX	Ceramic, 0.1 μF 16WV	
C372	F1H0J1050010	Ceramic, 1 μF 6.3WV	
C373	YECUZ1C104KX	Ceramic, 0.1 μF 16WV	
C374	F1H0J1050010	Ceramic, 1 μF 6.3WV	
C375	YECUZ1C104KX	Ceramic, 0.1 μF 16WV	
C376	YECUZ1C104KX	Ceramic, 0.1 μF 16WV	
C377	F1H0J1050010	Ceramic, 1 μF 6.3WV	
C378	F1H0J1050010	Ceramic, 1 μF 6.3WV	
C379	YECUZ1C104KX	Ceramic, 0.1 μF 16WV	
C380	EEFCD0J470R	Electrolytic, 47 μF 6.3WV	
C381	YECUZ1C104KX	Ceramic, 0.1 μF 16WV	
C382	YECUZ1C104KX	Ceramic, 0.1 μF 16WV	
C383	YECUZ1C104KX	Ceramic, 0.1 μF 16WV	
C384	YECUZ1C104KX	Ceramic, 0.1 μF 16WV	
C385	YECUZ1C104KX	Ceramic, 0.1 μF 16WV	
C386	YECUZ1C104KX	Ceramic, 0.1 μF 16WV	
C387	EEFUD0G121R	Electrolytic, 120 μF 4WV	
C389	F1J0J1060007	Ceramic, 10 μF 6.3WV	
C390	YECUZ1C104KX	Ceramic, 0.1 μF 16WV	
C391	F1H1H3R0A255	Ceramic, 3PF 50WV	
C392	F1H1H3R0A255	Ceramic, 3PF 50WV	
C393	F1K1C1060001	Ceramic, 10 μF 16WV	
C401	F1H1H470A231	Ceramic, 47PF 50WV	
C405	EEVFC1C681P	Electrolytic, 680 μF 16WV	
C406	F1H1H470A231	Ceramic, 47PF 50WV	
C408	YECUZ1C104KX	Ceramic, 0.1 μF 16WV	
C409	YECUZ1C104KX	Ceramic, 0.1 μF 16WV	
C411	YECUZ1C104KX	Ceramic, 0.1 μF 16WV	
C420	F1H1H101A231	Ceramic, 100PF 50WV	
C425	ECEV1CA471UP	Electrolytic, 470 μF 16WV	
C426	YECUZ1H331JC	Ceramic, 330PF 50WV	
C427	ECEV1AA101SP	Electrolytic, 100 μF 10WV	
C428	F1K1C1060001	Ceramic, 10 μF 16WV	

Ref. No.	Part No.	Part Name & Description	Remarks
C429	F1K1C1060001	Ceramic, 10 μ F 16WV	
C430	F1K1C1060001	Ceramic, 10 μ F 16WV	
C431	YECUZ1C104KX	Ceramic, 0.1 μ F 16WV	
C433	F1K1C1060001	Ceramic, 10 μ F 16WV	
C446	F1J1C1050013	Ceramic, 1 μ F 16WV	
C447	YECUZ1C104KX	Ceramic, 0.1 μ F 16WV	
C448	YECUZ1C104KX	Ceramic, 0.1 μ F 16WV	
C449	YECUS1A105KX	Ceramic, 1 μ F 10WV	
C450	YECUZ1H560JC	Ceramic, 56PF 50WV	
C451	F1K1C1060001	Ceramic, 10 μ F 16WV	
C452	F1K1C1060001	Ceramic, 10 μ F 16WV	
C453	YECUZ1H560JC	Ceramic, 56PF 50WV	
C454	F1K1C1060001	Ceramic, 10 μ F 16WV	
C455	YECUZ1C104KX	Ceramic, 0.1 μ F 16WV	
C456	YECUZ1C104KX	Ceramic, 0.1 μ F 16WV	
C457	F1K1C1060001	Ceramic, 10 μ F 16WV	
C458	YECUZ1C104KX	Ceramic, 0.1 μ F 16WV	
C459	F1K1C1060001	Ceramic, 10 μ F 16WV	
C460	F1K1C1060001	Ceramic, 10 μ F 16WV	
C502	YECUZ1C104KX	Ceramic, 0.1 μ F 16WV	
C504	YECUU1C106ZF	Tantalum, 10 μ F 16WV	
C505	EEFUD0J101R	Electrolytic, 100 μ F 6.3WV	
C506	YECUZ1C104KX	Ceramic, 0.1 μ F 16WV	
C507	YECUZ1C104KX	Ceramic, 0.1 μ F 16WV	
C508	YECUZ1C104KX	Ceramic, 0.1 μ F 16WV	
C509	YECUZ1C104KX	Ceramic, 0.1 μ F 16WV	
C510	YECUZ1C104KX	Ceramic, 0.1 μ F 16WV	
C511	YECUZ1C104KX	Ceramic, 0.1 μ F 16WV	
C512	YECUU1A226ZF	Tantalum, 22 μ F 10WV	
C513	YECUZ1C104KX	Ceramic, 0.1 μ F 16WV	
C514	F1H0J1050010	Ceramic, 1 μ F 6.3WV	
C515	YECUZ1C104KX	Ceramic, 0.1 μ F 16WV	
C516	YECUZ1A224KX	Ceramic, 0.22 μ F 10WV	
C517	YECUZ1C104KX	Ceramic, 0.1 μ F 16WV	
C518	F1H0J1050010	Ceramic, 1 μ F 6.3WV	
C519	EEFCD0J470R	Electrolytic, 47 μ F 6.3WV	
C520	YECUZ1C104KX	Ceramic, 0.1 μ F 16WV	
C521	YECUZ1C104KX	Ceramic, 0.1 μ F 16WV	
C522	YECUZ1C104KX	Ceramic, 0.1 μ F 16WV	

Ref. No.	Part No.	Part Name & Description	Remarks
C523	YECUZ1C104KX	Ceramic, 0.1 μF 16WV	
C524	YECUZ1C104KX	Ceramic, 0.1 μF 16WV	
C525	YECSW1A226MS	Tantalum, 22 μF 10WV	
C526	YECUZ1C104KX	Ceramic, 0.1 μF 16WV	
C527	YECUZ1C104KX	Ceramic, 0.1 μF 16WV	
C528	YECUZ1C104KX	Ceramic, 0.1 μF 16WV	
C529	YECUZ1C104KX	Ceramic, 0.1 μF 16WV	
C530	YECUZ1C104KX	Ceramic, 0.1 μF 16WV	
C531	YECUZ1C104KX	Ceramic, 0.1 μF 16WV	
C532	EEFCD0J470R	Electrolytic, 47 μF 6.3WV	
C533	YECUZ1C104KX	Ceramic, 0.1 μF 16WV	
C534	YECUZ1C104KX	Ceramic, 0.1 μF 16WV	
C535	YECUZ1C104KX	Ceramic, 0.1 μF 16WV	
C536	EEFCD0J470R	Electrolytic, 47 μF 6.3WV	
C537	YECUZ1C104KX	Ceramic, 0.1 μF 16WV	
C538	F1J1H200A025	Ceramic, 20PF 50WV	
C539	F1J1H200A025	Ceramic, 20PF 50WV	
C540	YECUZ1C104KX	Ceramic, 0.1 μF 16WV	
C541	YECUZ1C104KX	Ceramic, 0.1 μF 16WV	
C542	F1J1C1050013	Ceramic, 1 μF 16WV	
C543	F1J0J1060007	Ceramic, 10 μF 6.3WV	
C544	YECUZ1C104KX	Ceramic, 0.1 μF 16WV	
C545	YECUZ1H150JC	Ceramic, 15PF 50WV	
C546	YECUZ1H150JC	Ceramic, 15PF 50WV	
C547	F1J0J1060007	Ceramic, 10 μF 6.3WV	
C548	YECUZ1H103KX	Ceramic, 0.01 μF 50WV	
C549	YECUZ1C104KX	Ceramic, 0.1 μF 16WV	
C550	YECUZ1C104KX	Ceramic, 0.1 μF 16WV	
C551	YECUZ1C104KX	Ceramic, 0.1 μF 16WV	
C552	YECUZ1C104KX	Ceramic, 0.1 μF 16WV	
C553	EEFCD0J470R	Electrolytic, 47 μF 6.3WV	
C565	EEFUD0G121R	Electrolytic, 120 μF 4WV	
C567	YECUZ1C104KX	Ceramic, 0.1 μF 16WV	
C568	YECUZ1C104KX	Ceramic, 0.1 μF 16WV	
C569	YECUZ1C104KX	Ceramic, 0.1 μF 16WV	
C570	YECUZ1C104KX	Ceramic, 0.1 μF 16WV	
C571	YECUZ1C104KX	Ceramic, 0.1 μF 16WV	
C572	YECUZ1C104KX	Ceramic, 0.1 μF 16WV	
C573	YECUZ1C104KX	Ceramic, 0.1 μF 16WV	
C574	YECUZ1C104KX	Ceramic, 0.1 μF 16WV	

Ref. No.	Part No.	Part Name & Description	Remarks
C575	YECUZ1C104KX	Ceramic, 0.1 μF 16WV	
C576	YECUZ1C104KX	Ceramic, 0.1 μF 16WV	
C577	YECUZ1C104KX	Ceramic, 0.1 μF 16WV	
C578	YECUZ1C104KX	Ceramic, 0.1 μF 16WV	
C579	EEFUD0G121R	Electrolytic, 120 μF 4WV	
C581	YECUZ1C104KX	Ceramic, 0.1 μF 16WV	
C582	YECUZ1C104KX	Ceramic, 0.1 μF 16WV	
C583	F1H0J1050010	Ceramic, 1 μF 6.3WV	
C584	YECUZ1C104KX	Ceramic, 0.1 μF 16WV	
C585	YECUZ1C104KX	Ceramic, 0.1 μF 16WV	
C586	YECUZ1C104KX	Ceramic, 0.1 μF 16WV	
C587	YECUZ1H471KX	Ceramic, 470PF 50WV	
C588	YECUZ1H471KX	Ceramic, 470PF 50WV	
C589	YECUZ1C104KX	Ceramic, 0.1 μF 16WV	
C590	F1H0J1050010	Ceramic, 1 μF 6.3WV	
C591	YECUZ1C104KX	Ceramic, 0.1 μF 16WV	
C592	YECUZ1C104KX	Ceramic, 0.1 μF 16WV	
C593	YECUZ1C104KX	Ceramic, 0.1 μF 16WV	
C594	YECUZ1C104KX	Ceramic, 0.1 μF 16WV	
C595	YECUZ1C104KX	Ceramic, 0.1 μF 16WV	
C596	YECUZ1C104KX	Ceramic, 0.1 μF 16WV	
C597	F1H0J1050010	Ceramic, 1 μF 6.3WV	
C598	YECUZ1C104KX	Ceramic, 0.1 μF 16WV	
C599	YECUZ1C104KX	Ceramic, 0.1 μF 16WV	
C601	EEFUD0G121R	Electrolytic, 120 μF 4WV	
C602	YECUZ1C104KX	Ceramic, 0.1 μF 16WV	
C603	YECUZ1C104KX	Ceramic, 0.1 μF 16WV	
C604	F1H0J1050010	Ceramic, 1 μF 6.3WV	
C605	YECUZ1C104KX	Ceramic, 0.1 μF 16WV	
C606	YECUZ1C104KX	Ceramic, 0.1 μF 16WV	
C607	YECUZ1C104KX	Ceramic, 0.1 μF 16WV	
C608	YECUZ1C104KX	Ceramic, 0.1 μF 16WV	
C609	F1H0J1050010	Ceramic, 1 μF 6.3WV	
C610	F1H0J1050010	Ceramic, 1 μF 6.3WV	
C611	YECUZ1C104KX	Ceramic, 0.1 μF 16WV	
C614	YECUZ1C104KX	Ceramic, 0.1 μF 16WV	
C615	EEFCD0J470R	Electrolytic, 47 μF 6.3WV	
C616	YECUZ1C104KX	Ceramic, 0.1 μF 16WV	
C617	F1H0J1050010	Ceramic, 1 μF 6.3WV	

Ref. No.	Part No.	Part Name & Description	Remarks
C618	YECUZ1C104KX	Ceramic, 0.1 μ F 16WV	
C619	YECUZ1C104KX	Ceramic, 0.1 μ F 16WV	
C620	F1H0J1050010	Ceramic, 1 μ F 6.3WV	
C621	YECUZ1C104KX	Ceramic, 0.1 μ F 16WV	
C622	YECUZ1C104KX	Ceramic, 0.1 μ F 16WV	
C623	YECUZ1C104KX	Ceramic, 0.1 μ F 16WV	
C624	F1J0J1060007	Ceramic, 10 μ F 6.3WV	
C625	YECUZ1C104KX	Ceramic, 0.1 μ F 16WV	
C626	F1J0J1060007	Ceramic, 10 μ F 6.3WV	
C627	YECUZ1C104KX	Ceramic, 0.1 μ F 16WV	
C628	YECUZ1C104KX	Ceramic, 0.1 μ F 16WV	
C629	YECUZ1H330JC	Ceramic, 33PF 50WV	
C630	YECUZ1C104KX	Ceramic, 0.1 μ F 16WV	
C631	F1K1C1060001	Ceramic, 10 μ F 16WV	
C632	F1J0J1060007	Ceramic, 10 μ F 6.3WV	
C633	YECUZ1C104KX	Ceramic, 0.1 μ F 16WV	
C634	YECUZ1C104KX	Ceramic, 0.1 μ F 16WV	
C635	YECUZ1C104KX	Ceramic, 0.1 μ F 16WV	
C636	F1H1H101A231	Ceramic, 100PF 50WV	
C637	F1H1H101A231	Ceramic, 100PF 50WV	
C638	YECUZ1H472KX	Ceramic, 4700PF 50WV	
C639	YECUZ1C104KX	Ceramic, 0.1 μ F 16WV	
C640	F1J0J1060007	Ceramic, 10 μ F 6.3WV	
C641	YECUZ1C104KX	Ceramic, 0.1 μ F 16WV	
C701	YECUZ1C104KX	Ceramic, 0.1 μ F 16WV	
C702	F1K1C1060001	Ceramic, 10 μ F 16WV	
C704	F1K1C1060001	Ceramic, 10 μ F 16WV	
C705	YECUZ1C104KX	Ceramic, 0.1 μ F 16WV	
C706	EEFUD0G121R	Electrolytic, 120 μ F 4WV	
C707	F1K1C1060001	Ceramic, 10 μ F 16WV	
C708	YECUZ1C104KX	Ceramic, 0.1 μ F 16WV	
C709	YECUS1C474KX	Ceramic, 0.47 μ F 16WV	
C710	ECEV1CA471UP	Electrolytic, 470 μ F 16WV	
C711	YECUZ1C104KX	Ceramic, 0.1 μ F 16WV	
C712	YECUZ1C104KX	Ceramic, 0.1 μ F 16WV	
C713	ECEV1CA471UP	Electrolytic, 470 μ F 16WV	
C714	YECSV1CF105R	Tantalum, 1 μ F 16WV	
C715	YECUS1C474KX	Ceramic, 0.47 μ F 16WV	
C716	F1K1C1060001	Ceramic, 10 μ F 16WV	
C717	YECUZ1C104KX	Ceramic, 0.1 μ F 16WV	

Ref. No.	Part No.	Part Name & Description	Remarks
C718	EEVFC1C681P	Electrolytic, 680 μF 16WV	
C719	YECUZ1C104KX	Ceramic, 0.1 μF 16WV	
C720	F1K1C1060001	Ceramic, 10 μF 16WV	
C721	YECUZ1C104KX	Ceramic, 0.1 μF 16WV	
C722	YECUZ1C104KX	Ceramic, 0.1 μF 16WV	
C723	YECUU1A226ZF	Tantalum, 22 μF 10WV	
C724	YECSV1CF105R	Tantalum, 1 μF 16WV	
C725	ECA1CHG222B	Electrolytic, 2200 μF 16WV	
C726	EEVFK1C221XP	Electrolytic, 220 μF 16WV	
C727	YECUS1C474KX	Ceramic, 0.47 μF 16WV	
C728	YECUU1A226ZF	Tantalum, 22 μF 10WV	
C729	YECUU1A226ZF	Tantalum, 22 μF 10WV	
C730	YECUU1A226ZF	Tantalum, 22 μF 10WV	
C731	YECUU1A226ZF	Tantalum, 22 μF 10WV	
C732	F1K1C1060001	Ceramic, 10 μF 16WV	
C733	F1K1C1060001	Ceramic, 10 μF 16WV	
C734	YECUZ1C104KX	Ceramic, 0.1 μF 16WV	
C735	YECUZ1H102KX	Ceramic, 1000PF 50WV	
C736	F1K1C1060001	Ceramic, 10 μF 16WV	
C901	F1H1H682A190	Ceramic, 6800PF 50WV	
C902	YECUZ1C104KX	Ceramic, 0.1 μF 16WV	
C903	EEFUD0J101R	Electrolytic, 100 μF 6.3WV	
C904	F1K1C1060001	Ceramic, 10 μF 16WV	
C905	ECEV1CA471UP	Electrolytic, 470 μF 16WV	
C906	YECUZ1H332KX	Ceramic, 3300PF 50WV	
C907	YECUZ1C104KX	Ceramic, 0.1 μF 16WV	
C908	YECUZ1C104KX	Ceramic, 0.1 μF 16WV	
C909	F1H1H682A190	Ceramic, 6800PF 50WV	
C910	ECEV1CA101WP	Electrolytic, 100 μF 16WV	
C911	F1H1H682A190	Ceramic, 6800PF 50WV	
C912	YECUZ1C104KX	Ceramic, 0.1 μF 16WV	
C913	YECSV1CF105R	Tantalum, 1 μF 16WV	
C914	EEFUD0G121R	Electrolytic, 120 μF 4WV	
C915	YECUZ1C104KX	Ceramic, 0.1 μF 16WV	
C916	EEFUD0G121R	Electrolytic, 120 μF 4WV	
C917	F1K1C1060001	Ceramic, 10 μF 16WV	
C918	YECUZ1H332KX	Ceramic, 3300PF 50WV	
C919	F1K1C1060001	Ceramic, 10 μF 16WV	
C920	YECUZ1H103KX	Ceramic, 0.01 μF 50WV	
C923	ECA1CHG222B	Electrolytic, 2200 μF 16WV	
C927	YECUZ1C104KX	Ceramic, 0.1 μF 16WV	

Ref. No.	Part No.	Part Name & Description	Remarks
C928	F1K1C1060001	Ceramic, 10 μ F 16WV	
C929	F1K1C1060001	Ceramic, 10 μ F 16WV	
C930	YECUZ1C104KX	Ceramic, 0.1 μ F 16WV	
C931	YECUZ1C104KX	Ceramic, 0.1 μ F 16WV	
C932	F1K1C1060001	Ceramic, 10 μ F 16WV	
C933	YECUZ1C104KX	Ceramic, 0.1 μ F 16WV	
C934	F1H1E273A011	Ceramic, 0.027 μ F 25WV	
C935	F1K1C1060001	Ceramic, 10 μ F 16WV	
C936	YECUZ1H471KX	Ceramic, 470PF 50WV	
C937	YECUZ1H103KX	Ceramic, 0.01 μ F 50WV	
C938	YECUZ1H103KX	Ceramic, 0.01 μ F 50WV	
C939	F1H1H102A021	Ceramic, 1000PF 50WV	
C940	YECUZ1H103KX	Ceramic, 0.01 μ F 50WV	
C941	YECUZ1C104KX	Ceramic, 0.1 μ F 16WV	
C942	YECUZ1H103KX	Ceramic, 0.01 μ F 50WV	
C943	F1H1H102A021	Ceramic, 1000PF 50WV	
C944	EEFUD0G121R	Electrolytic, 120 μ F 4WV	
C946	YECUZ1C104KX	Ceramic, 0.1 μ F 16WV	
C947	YECUZ1H103KX	Ceramic, 0.01 μ F 50WV	
C949	F1H1H102A021	Ceramic, 1000PF 50WV	
C950	F1H1H822A190	Ceramic, 8200PF 50WV	
C951	YECUS1C224KX	Ceramic, 0.22 μ F 16WV	
C952	YECUZ1H103KX	Ceramic, 0.01 μ F 50WV	
C953	YECUZ1C104KX	Ceramic, 0.1 μ F 16WV	
C954	YECUZ1H332KX	Ceramic, 3300PF 50WV	
C955	EEFUE0K101R	Electrolytic, 100 μ F 8WV	
C956	F1J1H151A672	Ceramic, 150PF 50WV	
C957	YECUZ1C104KX	Ceramic, 0.1 μ F 16WV	
C958	YECUZ1H103KX	Ceramic, 0.01 μ F 50WV	
C959	F1K1C1060001	Ceramic, 10 μ F 16WV	
C960	F1H1H102A021	Ceramic, 1000PF 50WV	
C961	EEFUD0G121R	Electrolytic, 120 μ F 4WV	
C962	YECUZ1H472KX	Ceramic, 4700PF 50WV	
C963	F1H1H102A021	Ceramic, 1000PF 50WV	
C964	F1H1H222A190	Ceramic, 2200PF 50WV	
C965	YECUZ1C104KX	Ceramic, 0.1 μ F 16WV	
C966	F1J1C1050013	Ceramic, 1 μ F 16WV	
C967	YECUZ1C104KX	Ceramic, 0.1 μ F 16WV	
C968	F1K1C1060001	Ceramic, 10 μ F 16WV	
C969	YECUZ1H103KX	Ceramic, 0.01 μ F 50WV	
C971	F1H1H682A190	Ceramic, 6800PF 50WV	
C972	YECUZ1H332KX	Ceramic, 3300PF 50WV	

Ref. No.	Part No.	Part Name & Description	Remarks
C973	F1K1C1060001	Ceramic, 10 μF 16WV	
C974	EEFUD0J101R	Electrolytic, 100 μF 6.3WV	
C975	YECUZ1C104KX	Ceramic, 0.1 μF 16WV	
C976	F1H1H222A190	Ceramic, 2200PF 50WV	
C977	EEVFC1C681P	Electrolytic, 680 μF 16WV	
C978	YECUV1C225KX	Ceramic, 2.2 μF 16WV	
C979	YECUV1C225KX	Ceramic, 2.2 μF 16WV	
C980	EEVFK1A471P	Electrolytic, 470 μF 10WV	
C981	YECUZ1C104KX	Ceramic, 0.1 μF 16WV	
C982	F1J0J1060007	Ceramic, 10 μF 6.3WV	
C983	F1K1C1060001	Ceramic, 10 μF 16WV	
C984	YECUZ1C104KX	Ceramic, 0.1 μF 16WV	
C985	YECUZ1C104KX	Ceramic, 0.1 μF 16WV	
C986	F1K1C1060001	Ceramic, 10 μF 16WV	
C987	F1K1C1060001	Ceramic, 10 μF 16WV	
LC301	F1Z1E2220001	Ceramic, 2200PF 25WV	
LC302	F1Z1E2220001	Ceramic, 2200PF 25WV	
LC501	F1Z1E4710001	Ceramic, 470PF 25WV	
LC502	F1Z1E4710001	Ceramic, 470PF 25WV	
LC503	F1Z1E4710001	Ceramic, 470PF 25WV	
LC507	F1Z1E4710001	Ceramic, 470PF 25WV	
LC508	F1Z1E4710001	Ceramic, 470PF 25WV	
LC601	F1Z1E4710001	Ceramic, 470PF 25WV	
RESISTORs			
FB101	ERJ3GEY0R00V	Chip, 0 Ω 1/16W	
FB102	ERJ3GEY0R00V	Chip, 0 Ω 1/16W	
FB103	ERJ3GEY0R00V	Chip, 0 Ω 1/16W	
FB104	ERJ3GEY0R00V	Chip, 0 Ω 1/16W	
FB105	ERJ3GEY0R00V	Chip, 0 Ω 1/16W	
FB106	ERJ3GEY0R00V	Chip, 0 Ω 1/16W	
FB107	ERJ3GEY0R00V	Chip, 0 Ω 1/16W	
FB108	ERJ3GEY0R00V	Chip, 0 Ω 1/16W	
FB109	ERJ3GEY0R00V	Chip, 0 Ω 1/16W	
FB110	ERJ3GEY0R00V	Chip, 0 Ω 1/16W	
FB112	ERJ3GEY0R00V	Chip, 0 Ω 1/16W	
FB113	ERJ3GEY0R00V	Chip, 0 Ω 1/16W	
FB114	ERJ3GEY0R00V	Chip, 0 Ω 1/16W	
FB115	ERJ3GEY0R00V	Chip, 0 Ω 1/16W	
FB116	ERJ3GEY0R00V	Chip, 0 Ω 1/16W	
FB117	ERJ3GEY0R00V	Chip, 0 Ω 1/16W	
FB118	ERJ3GEY0R00V	Chip, 0 Ω 1/16W	
FB119	ERJ3GEY0R00V	Chip, 0 Ω 1/16W	
FB120	ERJ3GEY0R00V	Chip, 0 Ω 1/16W	

Ref. No.	Part No.	Part Name & Description	Remarks
FB121	ERJ3GEY0R00V	Chip, 0 Ω 1/16W	
FB122	ERJ3GEY0R00V	Chip, 0 Ω 1/16W	
FB124	ERJ3GEY0R00V	Chip, 0 Ω 1/16W	
FB125	ERJ3GEY0R00V	Chip, 0 Ω 1/16W	
FB126	ERJ3GEY0R00V	Chip, 0 Ω 1/16W	
FB301	ERJ3GEY0R00V	Chip, 0 Ω 1/16W	
FB302	ERJ3GEY0R00V	Chip, 0 Ω 1/16W	
FB303	ERJ3GEY0R00V	Chip, 0 Ω 1/16W	
FB304	ERJ3GEY0R00V	Chip, 0 Ω 1/16W	
FB305	ERJ3GEY0R00V	Chip, 0 Ω 1/16W	
FB306	ERJ3GEY0R00V	Chip, 0 Ω 1/16W	
FB413	ERJ3GEY0R00V	Chip, 0 Ω 1/16W	
FB414	ERJ3GEY0R00V	Chip, 0 Ω 1/16W	
FB415	ERJ6GEY0R00V	Chip, 0 Ω 1/10W	
FB416	ERJ6GEY0R00V	Chip, 0 Ω 1/10W	
FB422	ERJ3GEY0R00V	Chip, 0 Ω 1/16W	
FB423	ERJ3GEY0R00V	Chip, 0 Ω 1/16W	
FB424	ERJ3GEY0R00V	Chip, 0 Ω 1/16W	
FB425	ERJ3GEY0R00V	Chip, 0 Ω 1/16W	
FB426	ERJ6GEY0R00V	Chip, 0 Ω 1/10W	
FB427	ERJ6GEY0R00V	Chip, 0 Ω 1/10W	
FB428	ERJ6GEY0R00V	Chip, 0 Ω 1/10W	
FB429	ERJ6GEY0R00V	Chip, 0 Ω 1/10W	
FB430	ERJ6GEY0R00V	Chip, 0 Ω 1/10W	
FB431	ERJ6GEY0R00V	Chip, 0 Ω 1/10W	
FB432	ERJ6GEY0R00V	Chip, 0 Ω 1/10W	
FB433	ERJ6GEY0R00V	Chip, 0 Ω 1/10W	
FB434	ERJ6GEY0R00V	Chip, 0 Ω 1/10W	
FB435	ERJ6GEY0R00V	Chip, 0 Ω 1/10W	
FB438	ERJ6GEY0R00V	Chip, 0 Ω 1/10W	
FB439	ERJ6GEY0R00V	Chip, 0 Ω 1/10W	
FB441	ERJ6GEY0R00V	Chip, 0 Ω 1/10W	
FB901	ERJ8GEY0R00V	Chip, 0 Ω 1/8W	
FB902	ERJ8GEY0R00V	Chip, 0 Ω 1/8W	
FB903	ERJ8GEY0R00V	Chip, 0 Ω 1/8W	
FB904	ERJ8GEY0R00V	Chip, 0 Ω 1/8W	
FB915	ERJ3GEY0R00V	Chip, 0 Ω 1/16W	
FB916	ERJ3GEYJ221V	Chip, 220 Ω 1/16W	
FB917	ERJ3GEYJ221V	Chip, 220 Ω 1/16W	
L51	ERJ8GEY0R00V	Chip, 0 Ω 1/8W	
R51	ERJ3GEYJ183V	Chip, 18k Ω 1/16W	
R52	ERJ3GEYJ363V	Chip, 36k Ω 1/16W	
R53	ERJ3GEYJ363V	Chip, 36k Ω 1/16W	
R54	ERJ3GEYJ183V	Chip, 18k Ω 1/16W	
R55	ERJ3GEYJ183V	Chip, 18k Ω 1/16W	

Ref. No.	Part No.	Part Name & Description	Remarks
R56	ERJ3GEYJ750V	Chip, 75 Ω 1/16W	
R57	ERJ3GEYJ363V	Chip, 36k Ω 1/16W	
R59	ERJ3GEYJ183V	Chip, 18k Ω 1/16W	
R60	ERJ3GEYJ363V	Chip, 36k Ω 1/16W	
R61	ERJ6GEY0R00V	Chip, 0 Ω 1/10W	
R62	ERJ6GEY0R00V	Chip, 0 Ω 1/10W	
R63	ERJ6GEY0R00V	Chip, 0 Ω 1/10W	
R64	ERJ3GEYJ220V	Chip, 22 Ω 1/16W	
R65	ERJ3GEYJ220V	Chip, 22 Ω 1/16W	
R66	ERJ3GEYJ220V	Chip, 22 Ω 1/16W	
R67	ERJ3GEYJ220V	Chip, 22 Ω 1/16W	
R68	ERJ3GEYJ220V	Chip, 22 Ω 1/16W	
R69	ERJ3GEYJ220V	Chip, 22 Ω 1/16W	
R71	ERJ3GEYJ220V	Chip, 22 Ω 1/16W	
R72	ERJ3GEYJ220V	Chip, 22 Ω 1/16W	
R73	ERJ3GEYJ220V	Chip, 22 Ω 1/16W	
R74	ERJ3GEYJ220V	Chip, 22 Ω 1/16W	
R75	ERJ6GEY0R00V	Chip, 0 Ω 1/10W	
R79	ERJ8GEY0R00V	Chip, 0 Ω 1/8W	
R80	ERJ8GEY0R00V	Chip, 0 Ω 1/8W	
R81	ERJ3GEYJ222V	Chip, 2.2k Ω 1/16W	
R82	ERJ3GEYJ332V	Chip, 3.3k Ω 1/16W	
R83	ERJ3GEY0R00V	Chip, 0 Ω 1/16W	
R86	ERJ12YJ1R0H	Chip, 1 Ω 1/2W	
R87	ERJ12YJ1R0H	Chip, 1 Ω 1/2W	
R88	ERJ3GEY0R00V	Chip, 0 Ω 1/16W	
R89	ERJ3GEY0R00V	Chip, 0 Ω 1/16W	
R91	ERJ3GEYJ102V	Chip, 1k Ω 1/16W	
R92	ERJ3GEYJ103V	Chip, 10k Ω 1/16W	
R93	ERJ3GEYJ103V	Chip, 10k Ω 1/16W	
R101	ERJ3GEY0R00V	Chip, 0 Ω 1/16W	
R102	ERJ3GEY0R00V	Chip, 0 Ω 1/16W	
R103	ERJ3GEY0R00V	Chip, 0 Ω 1/16W	
R107	ERJ3GEY0R00V	Chip, 0 Ω 1/16W	
R109	ERJ3GEYJ103V	Chip, 10k Ω 1/16W	
R110	ERJ3GEYJ103V	Chip, 10k Ω 1/16W	
R111	ERJ3GEY0R00V	Chip, 0 Ω 1/16W	
R112	ERJ3GEYJ101V	Chip, 100 Ω 1/16W	
R113	ERJ3GEYJ101V	Chip, 100 Ω 1/16W	
R114	ERJ3GEY0R00V	Chip, 0 Ω 1/16W	
R116	ERJ3GEY0R00V	Chip, 0 Ω 1/16W	
R118	ERJ6GEY0R00V	Chip, 0 Ω 1/10W	
R119	ERJ6GEY0R00V	Chip, 0 Ω 1/10W	
R122	ERJ3GEYJ681V	Chip, 680 Ω 1/16W	
R123	ERJ3GEYJ561V	Chip, 560 Ω 1/16W	

Ref. No.	Part No.	Part Name & Description	Remarks
R124	ERJ3GEYJ103V	Chip, 10k Ω 1/16W	
R201	ERJ3GEYJ333V	Chip, 33k Ω 1/16W	
R202	ERJ3GEYJ333V	Chip, 33k Ω 1/16W	
R203	ERJ3GEYJ333V	Chip, 33k Ω 1/16W	
R204	ERJ3GEYJ333V	Chip, 33k Ω 1/16W	
R205	ERJ3GEYJ683V	Chip, 68k Ω 1/16W	
R206	ERJ3GEY0R00V	Chip, 0 Ω 1/16W	
R207	ERJ3GEYJ122V	Chip, 1.2k Ω 1/16W	
R208	ERJ3GEYJ683V	Chip, 68k Ω 1/16W	
R209	ERJ3GEY0R00V	Chip, 0 Ω 1/16W	
R211	ERJ3GEYJ561V	Chip, 560 Ω 1/16W	
R212	ERJ3GEYJ473V	Chip, 47k Ω 1/16W	
R215	ERJ3GEYJ560V	Chip, 56 Ω 1/16W	
R216	ERJ3GEYJ560V	Chip, 56 Ω 1/16W	
R217	ERJ3GEYJ560V	Chip, 56 Ω 1/16W	
R218	ERJ3GEYJ473V	Chip, 47k Ω 1/16W	
R219	ERJ3GEYJ473V	Chip, 47k Ω 1/16W	
R220	ERJ3GEYJ473V	Chip, 47k Ω 1/16W	
R221	ERJ3GEYJ333V	Chip, 33k Ω 1/16W	
R222	ERJ3GEYJ303V	Chip, 30k Ω 1/16W	
R223	ERJ3GEYJ333V	Chip, 33k Ω 1/16W	
R224	ERJ3GEYJ303V	Chip, 30k Ω 1/16W	
R225	ERJ3GEYJ472V	Chip, 4.7k Ω 1/16W	
R226	ERJ3GEYJ472V	Chip, 4.7k Ω 1/16W	
R227	ERJ3GEYJ472V	Chip, 4.7k Ω 1/16W	
R228	ERJ3GEYJ472V	Chip, 4.7k Ω 1/16W	
R229	ERJ3GEY0R00V	Chip, 0 Ω 1/16W	
R230	ERJ3GEYJ333V	Chip, 33k Ω 1/16W	
R231	ERJ3GEYJ183V	Chip, 18k Ω 1/16W	
R232	ERJ3GEYJ333V	Chip, 33k Ω 1/16W	
R233	ERJ3GEYJ333V	Chip, 33k Ω 1/16W	
R234	ERJ3GEYJ333V	Chip, 33k Ω 1/16W	
R235	ERJ3GEYJ333V	Chip, 33k Ω 1/16W	
R236	ERJ3GEY0R00V	Chip, 0 Ω 1/16W	
R237	ERJ3GEYJ333V	Chip, 33k Ω 1/16W	
R238	ERJ3GEYJ183V	Chip, 18k Ω 1/16W	
R239	ERJ3GEYJ333V	Chip, 33k Ω 1/16W	
R240	ERJ3GEYJ333V	Chip, 33k Ω 1/16W	
R241	ERJ3GEYJ333V	Chip, 33k Ω 1/16W	
R242	ERJ3GEYJ333V	Chip, 33k Ω 1/16W	
R243	ERJ3GEY0R00V	Chip, 0 Ω 1/16W	
R244	ERJ3GEYJ333V	Chip, 33k Ω 1/16W	
R245	ERJ3GEYJ183V	Chip, 18k Ω 1/16W	
R247	ERJ3GEYJ102V	Chip, 1k Ω 1/16W	
R248	ERJ3GEYJ303V	Chip, 30k Ω 1/16W	

Ref. No.	Part No.	Part Name & Description	Remarks
R249	ERJ3GEYJ682V	Chip, 6.8k Ω 1/16W	
R250	ERJ3GEYJ103V	Chip, 10k Ω 1/16W	
R251	ERJ3GEYJ103V	Chip, 10k Ω 1/16W	
R252	ERJ3GEYJ333V	Chip, 33k Ω 1/16W	
R253	ERJ3GEYJ562V	Chip, 5.6k Ω 1/16W	
R254	ERJ3GEYJ562V	Chip, 5.6k Ω 1/16W	
R255	ERJ3GEYJ562V	Chip, 5.6k Ω 1/16W	
R256	ERJ3GEYJ101V	Chip, 100 Ω 1/16W	
R258	ERJ3GEYJ221V	Chip, 220 Ω 1/16W	
R259	ERJ3GEYJ101V	Chip, 100 Ω 1/16W	
R260	ERJ3GEYJ221V	Chip, 220 Ω 1/16W	
R261	ERJ3GEYJ221V	Chip, 220 Ω 1/16W	
R262	ERJ3GEYJ221V	Chip, 220 Ω 1/16W	
R263	ERJ3GEYJ221V	Chip, 220 Ω 1/16W	
R265	ERJ3GEYJ221V	Chip, 220 Ω 1/16W	
R267	ERJ3GEYJ220V	Chip, 22 Ω 1/16W	
R268	ERJ3GEYJ220V	Chip, 22 Ω 1/16W	
R269	ERJ3GEYJ220V	Chip, 22 Ω 1/16W	
R271	ERJ3GEY0R00V	Chip, 0 Ω 1/16W	
R272	ERJ3GEYJ220V	Chip, 22 Ω 1/16W	
R273	ERJ3GEYJ220V	Chip, 22 Ω 1/16W	
R274	ERJ3GEYJ220V	Chip, 22 Ω 1/16W	
R275	ERJ3GEYJ102V	Chip, 1k Ω 1/16W	
R276	ERJ3GEYJ102V	Chip, 1k Ω 1/16W	
R277	ERJ3GEYJ103V	Chip, 10k Ω 1/16W	
R278	ERJ3GEYJ103V	Chip, 10k Ω 1/16W	
R279	ERJ3GEYJ103V	Chip, 10k Ω 1/16W	
R280	ERJ3GEYJ103V	Chip, 10k Ω 1/16W	
R281	ERJ3GEYJ220V	Chip, 22 Ω 1/16W	
R282	ERJ3GEYJ220V	Chip, 22 Ω 1/16W	
R283	ERJ3GEYJ220V	Chip, 22 Ω 1/16W	
R287	ERJ3GEYJ101V	Chip, 100 Ω 1/16W	
R288	ERJ3GEYJ101V	Chip, 100 Ω 1/16W	
R289	ERJ3GEYJ471V	Chip, 470 Ω 1/16W	
R294	ERJ3GEYJ561V	Chip, 560 Ω 1/16W	
R295	ERJ3GEYJ471V	Chip, 470 Ω 1/16W	
R296	ERJ3GEYJ221V	Chip, 220 Ω 1/16W	
R297	ERJ3GEYJ750V	Chip, 75 Ω 1/16W	
R298	ERJ3GEYJ220V	Chip, 22 Ω 1/16W	
R299	ERJ3GEYJ220V	Chip, 22 Ω 1/16W	
R301	ERJ3GEYJ333V	Chip, 33k Ω 1/16W	
R302	ERJ3GEYJ333V	Chip, 33k Ω 1/16W	
R303	ERJ3GEYJ333V	Chip, 33k Ω 1/16W	
R304	ERJ3GEYJ333V	Chip, 33k Ω 1/16W	
R305	ERJ3GEYJ683V	Chip, 68k Ω 1/16W	

Ref. No.	Part No.	Part Name & Description	Remarks
R306	ERJ3GEY0R00V	Chip, 0 Ω 1/16W	
R307	ERJ3GEYJ122V	Chip, 1.2k Ω 1/16W	
R308	ERJ3GEYJ683V	Chip, 68k Ω 1/16W	
R309	ERJ3GEY0R00V	Chip, 0 Ω 1/16W	
R310	ERJ3GEYJ561V	Chip, 560 Ω 1/16W	
R311	ERJ3GEYJ473V	Chip, 47k Ω 1/16W	
R313	ERJ3GEYJ560V	Chip, 56 Ω 1/16W	
R314	ERJ3GEYJ560V	Chip, 56 Ω 1/16W	
R315	ERJ3GEYJ560V	Chip, 56 Ω 1/16W	
R316	ERJ3GEYJ473V	Chip, 47k Ω 1/16W	
R317	ERJ3GEYJ473V	Chip, 47k Ω 1/16W	
R318	ERJ3GEYJ473V	Chip, 47k Ω 1/16W	
R319	ERJ3GEYJ333V	Chip, 33k Ω 1/16W	
R320	ERJ3GEYJ303V	Chip, 30k Ω 1/16W	
R321	ERJ3GEYJ333V	Chip, 33k Ω 1/16W	
R322	ERJ3GEYJ303V	Chip, 30k Ω 1/16W	
R323	ERJ3GEYJ220V	Chip, 22 Ω 1/16W	
R324	ERJ3GEYJ220V	Chip, 22 Ω 1/16W	
R325	ERJ3GEYJ472V	Chip, 4.7k Ω 1/16W	
R326	ERJ3GEYJ472V	Chip, 4.7k Ω 1/16W	
R327	ERJ3GEYJ472V	Chip, 4.7k Ω 1/16W	
R328	ERJ3GEYJ472V	Chip, 4.7k Ω 1/16W	
R329	ERJ3GEY0R00V	Chip, 0 Ω 1/16W	
R330	ERJ3GEYJ333V	Chip, 33k Ω 1/16W	
R331	ERJ3GEYJ183V	Chip, 18k Ω 1/16W	
R332	ERJ3GEYJ333V	Chip, 33k Ω 1/16W	
R333	ERJ3GEYJ333V	Chip, 33k Ω 1/16W	
R334	ERJ3GEYJ333V	Chip, 33k Ω 1/16W	
R335	ERJ3GEYJ333V	Chip, 33k Ω 1/16W	
R336	ERJ3GEY0R00V	Chip, 0 Ω 1/16W	
R337	ERJ3GEYJ333V	Chip, 33k Ω 1/16W	
R338	ERJ3GEYJ183V	Chip, 18k Ω 1/16W	
R339	ERJ3GEYJ333V	Chip, 33k Ω 1/16W	
R340	ERJ3GEYJ333V	Chip, 33k Ω 1/16W	
R341	ERJ3GEYJ333V	Chip, 33k Ω 1/16W	
R342	ERJ3GEYJ333V	Chip, 33k Ω 1/16W	
R343	ERJ3GEY0R00V	Chip, 0 Ω 1/16W	
R344	ERJ3GEYJ333V	Chip, 33k Ω 1/16W	
R345	ERJ3GEYJ183V	Chip, 18k Ω 1/16W	
R347	ERJ3GEYJ102V	Chip, 1k Ω 1/16W	
R348	ERJ3GEYJ303V	Chip, 30k Ω 1/16W	
R349	ERJ3GEYJ682V	Chip, 6.8k Ω 1/16W	
R350	ERJ3GEYJ220V	Chip, 22 Ω 1/16W	
R351	ERJ3GEYJ103V	Chip, 10k Ω 1/16W	
R352	ERJ3GEYJ333V	Chip, 33k Ω 1/16W	

Ref. No.	Part No.	Part Name & Description	Remarks
R353	ERJ3GEYJ562V	Chip, 5.6k Ω 1/16W	
R354	ERJ3GEYJ562V	Chip, 5.6k Ω 1/16W	
R355	ERJ3GEYJ562V	Chip, 5.6k Ω 1/16W	
R356	ERJ3GEYJ104V	Chip, 100k Ω 1/16W	
R357	ERJ3GEYJ472V	Chip, 4.7k Ω 1/16W	
R358	ERJ3GEYJ104V	Chip, 100k Ω 1/16W	
R359	ERJ3GEYJ220V	Chip, 22 Ω 1/16W	
R360	ERJ3GEY0R00V	Chip, 0 Ω 1/16W	
R361	ERJ3GEYJ220V	Chip, 22 Ω 1/16W	
R362	ERJ3GEY0R00V	Chip, 0 Ω 1/16W	
R363	ERJ3GEYJ220V	Chip, 22 Ω 1/16W	
R364	ERJ3GEYJ102V	Chip, 1k Ω 1/16W	
R365	ERJ3GEYJ105V	Chip, 1M Ω 1/16W	
R366	ERJ3GEYJ220V	Chip, 22 Ω 1/16W	
R367	ERJ3GEYJ220V	Chip, 22 Ω 1/16W	
R368	ERJ3GEYJ220V	Chip, 22 Ω 1/16W	
R369	ERJ3GEYJ102V	Chip, 1k Ω 1/16W	
R370	ERJ3GEYJ220V	Chip, 22 Ω 1/16W	
R371	ERJ3GEYJ220V	Chip, 22 Ω 1/16W	
R372	ERJ3GEY0R00V	Chip, 0 Ω 1/16W	
R374	ERJ3GEYJ220V	Chip, 22 Ω 1/16W	
R375	ERJ3GEYJ220V	Chip, 22 Ω 1/16W	
R376	ERJ3GEYJ220V	Chip, 22 Ω 1/16W	
R377	ERJ3GEYJ220V	Chip, 22 Ω 1/16W	
R378	ERJ3GEYJ220V	Chip, 22 Ω 1/16W	
R379	ERJ3GEYJ220V	Chip, 22 Ω 1/16W	
R380	ERJ3GEYJ103V	Chip, 10k Ω 1/16W	
R381	ERJ3GEYJ103V	Chip, 10k Ω 1/16W	
R382	ERJ3GEYJ220V	Chip, 22 Ω 1/16W	
R383	ERJ3GEYJ220V	Chip, 22 Ω 1/16W	
R384	ERJ3GEYJ220V	Chip, 22 Ω 1/16W	
R385	ERJ3GEYJ220V	Chip, 22 Ω 1/16W	
R386	ERJ3GEYJ220V	Chip, 22 Ω 1/16W	
R387	ERJ3GEYJ220V	Chip, 22 Ω 1/16W	
R388	ERJ3GEYJ221V	Chip, 220 Ω 1/16W	
R389	ERJ3GEYJ221V	Chip, 220 Ω 1/16W	
R390	ERJ3GEYJ220V	Chip, 22 Ω 1/16W	
R392	ERJ3GEYJ103V	Chip, 10k Ω 1/16W	
R393	ERJ3GEYJ220V	Chip, 22 Ω 1/16W	
R394	ERJ3GEYJ220V	Chip, 22 Ω 1/16W	
R395	ERJ3GEY0R00V	Chip, 0 Ω 1/16W	
R396	ERJ3GEYJ102V	Chip, 1k Ω 1/16W	
R397	ERJ3GEYJ105V	Chip, 1M Ω 1/16W	
R401	ERJ6GEY0R00V	Chip, 0 Ω 1/10W	
R402	ERJ3GEYJ471V	Chip, 470 Ω 1/16W	

Ref. No.	Part No.	Part Name & Description	Remarks
R403	ERJ3GEYJ473V	Chip, 47k Ω 1/16W	
R404	ERJ3GEYJ471V	Chip, 470 Ω 1/16W	
R407	ERJ3GEYJ471V	Chip, 470 Ω 1/16W	
R408	ERJ3GEYJ473V	Chip, 47k Ω 1/16W	
R409	ERJ3GEYJ750V	Chip, 75 Ω 1/16W	
R411	ERJ6GEY0R00V	Chip, 0 Ω 1/10W	
R412	ERJ6GEY0R00V	Chip, 0 Ω 1/10W	
R413	ERJ6GEY0R00V	Chip, 0 Ω 1/10W	
R414	ERJ3GEYJ750V	Chip, 75 Ω 1/16W	
R415	ERJ3GEYJ100V	Chip, 10 Ω 1/16W	
R416	ERJ3GEYJ151V	Chip, 150 Ω 1/16W	
R417	ERJ3GEYJ103V	Chip, 10k Ω 1/16W	
R418	ERJ3GEYJ103V	Chip, 10k Ω 1/16W	
R421	ERJ3GEYJ103V	Chip, 10k Ω 1/16W	
R422	ERJ3GEYJ102V	Chip, 1k Ω 1/16W	
R423	ERJ3GEYJ750V	Chip, 75 Ω 1/16W	
R424	ERJ3GEYJ750V	Chip, 75 Ω 1/16W	
R425	ERJ3GEYJ750V	Chip, 75 Ω 1/16W	
R426	ERJ3GEYJ750V	Chip, 75 Ω 1/16W	
R427	ERJ3GEYJ102V	Chip, 1k Ω 1/16W	
R428	ERJ3GEYJ102V	Chip, 1k Ω 1/16W	
R429	ERJ3GEYJ222V	Chip, 2.2k Ω 1/16W	
R430	ERJ3GEYJ473V	Chip, 47k Ω 1/16W	
R431	ERJ3GEYJ222V	Chip, 2.2k Ω 1/16W	
R432	ERJ3GEYJ473V	Chip, 47k Ω 1/16W	
R433	ERJ3GEY0R00V	Chip, 0 Ω 1/16W	
R435	ERJ3GEY0R00V	Chip, 0 Ω 1/16W	
R437	ERJ3GEYJ561V	Chip, 560 Ω 1/16W	
R438	ERJ3GEYJ333V	Chip, 33k Ω 1/16W	
R439	ERJ3GEYJ333V	Chip, 33k Ω 1/16W	
R440	ERJ3GEYJ333V	Chip, 33k Ω 1/16W	
R441	ERJ3GEYJ333V	Chip, 33k Ω 1/16W	
R442	ERJ6GEY0R00V	Chip, 0 Ω 1/10W	
R443	ERJ3GEYJ103V	Chip, 10k Ω 1/16W	
R444	ERJ3GEYJ220V	Chip, 22 Ω 1/16W	
R445	ERJ3GEYJ220V	Chip, 22 Ω 1/16W	
R446	ERJ3GEYJ104V	Chip, 100k Ω 1/16W	
R501	ERJ3GEYJ101V	Chip, 100 Ω 1/16W	
R502	ERJ3GEYJ332V	Chip, 3.3k Ω 1/16W	
R503	ERJ3GEYJ103V	Chip, 10k Ω 1/16W	
R504	ERJ3GEYJ151V	Chip, 150 Ω 1/16W	
R505	ERJ3GEYJ471V	Chip, 470 Ω 1/16W	
R506	ERJ8GEY0R00V	Chip, 0 Ω 1/8W	
R507	ERJ3GEY0R00V	Chip, 0 Ω 1/16W	
R508	ERJ3GEY0R00V	Chip, 0 Ω 1/16W	

Ref. No.	Part No.	Part Name & Description	Remarks
R509	ERJ3GEY0R00V	Chip, 0 Ω 1/16W	
R510	ERJ3GEYJ101V	Chip, 100 Ω 1/16W	
R511	ERJ3GEYJ330V	Chip, 33 Ω 1/16W	
R512	ERJ3GEYJ105V	Chip, 1M Ω 1/16W	
R513	ERJ3GEYJ220V	Chip, 22 Ω 1/16W	
R514	ERJ3GEYJ820V	Chip, 82 Ω 1/16W	
R517	ERJ3GEYJ750V	Chip, 75 Ω 1/16W	
R518	ERJ3GEYJ220V	Chip, 22 Ω 1/16W	
R519	ERJ3GEYJ220V	Chip, 22 Ω 1/16W	
R520	ERJ3GEYJ220V	Chip, 22 Ω 1/16W	
R521	ERJ3GEYJ220V	Chip, 22 Ω 1/16W	
R522	ERJ3GEYJ220V	Chip, 22 Ω 1/16W	
R523	ERJ3GEYJ220V	Chip, 22 Ω 1/16W	
R524	ERJ3GEY0R00V	Chip, 0 Ω 1/16W	
R525	ERJ3GEYJ105V	Chip, 1M Ω 1/16W	
R526	ERJ3GEYJ102V	Chip, 1k Ω 1/16W	
R527	ERJ3GEYJ102V	Chip, 1k Ω 1/16W	
R528	ERJ3GEYJ221V	Chip, 220 Ω 1/16W	
R529	ERJ3GEYJ221V	Chip, 220 Ω 1/16W	
R530	ERJ3GEYJ101V	Chip, 100 Ω 1/16W	
R531	ERJ3GEY0R00V	Chip, 0 Ω 1/16W	
R532	ERJ3GEYJ101V	Chip, 100 Ω 1/16W	
R533	ERJ3GEYJ101V	Chip, 100 Ω 1/16W	
R534	ERJ6GEY0R00V	Chip, 0 Ω 1/10W	
R535	ERJ8GEY0R00V	Chip, 0 Ω 1/8W	
R537	ERJ8GEY0R00V	Chip, 0 Ω 1/8W	
R538	ERJ8GEY0R00V	Chip, 0 Ω 1/8W	
R539	ERJ3GEYJ101V	Chip, 100 Ω 1/16W	
R540	ERJ3GEYJ220V	Chip, 22 Ω 1/16W	
R541	ERJ3GEYJ220V	Chip, 22 Ω 1/16W	
R542	ERJ3GEYJ220V	Chip, 22 Ω 1/16W	
R543	ERJ3GEYJ220V	Chip, 22 Ω 1/16W	
R544	ERJ3GEYJ103V	Chip, 10k Ω 1/16W	
R545	ERJ3GEYJ220V	Chip, 22 Ω 1/16W	
R554	ERJ3GEYJ220V	Chip, 22 Ω 1/16W	
R555	ERJ3GEYJ220V	Chip, 22 Ω 1/16W	
R556	ERJ3GEYJ220V	Chip, 22 Ω 1/16W	
R557	ERJ3GEYJ220V	Chip, 22 Ω 1/16W	
R558	ERJ3GEYJ220V	Chip, 22 Ω 1/16W	
R559	ERJ3GEYJ220V	Chip, 22 Ω 1/16W	
R560	ERJ3GEYJ473V	Chip, 47k Ω 1/16W	
R563	ERJ3GEYJ473V	Chip, 47k Ω 1/16W	
R565	ERJ3GEYJ473V	Chip, 47k Ω 1/16W	
R566	ERJ3GEY0R00V	Chip, 0 Ω 1/16W	
R567	ERJ3GEYJ220V	Chip, 22 Ω 1/16W	

Ref. No.	Part No.	Part Name & Description	Remarks
R568	ERJ3GEYJ202V	Chip, 2k Ω 1/16W	
R569	ERJ3GEYJ202V	Chip, 2k Ω 1/16W	
R570	ERJ3GEYJ220V	Chip, 22 Ω 1/16W	
R571	ERJ3GEYJ220V	Chip, 22 Ω 1/16W	
R572	ERJ3GEYJ220V	Chip, 22 Ω 1/16W	
R573	ERJ3GEYJ220V	Chip, 22 Ω 1/16W	
R582	ERJ3GEYJ220V	Chip, 22 Ω 1/16W	
R583	ERJ3GEYJ220V	Chip, 22 Ω 1/16W	
R584	ERJ3GEYJ220V	Chip, 22 Ω 1/16W	
R585	ERJ3GEYJ220V	Chip, 22 Ω 1/16W	
R586	ERJ3GEYJ271V	Chip, 270 Ω 1/16W	
R587	ERJ3GEYJ271V	Chip, 270 Ω 1/16W	
R588	ERJ3GEYJ271V	Chip, 270 Ω 1/16W	
R589	ERJ3GEYJ302V	Chip, 3k Ω 1/16W	
R590	ERJ3GEYJ101V	Chip, 100 Ω 1/16W	
R593	ERJ3GEYJ220V	Chip, 22 Ω 1/16W	
R594	ERJ3GEYJ220V	Chip, 22 Ω 1/16W	
R595	ERJ3GEYJ221V	Chip, 220 Ω 1/16W	
R596	ERJ3GEYJ221V	Chip, 220 Ω 1/16W	
R598	ERJ3GEYJ220V	Chip, 22 Ω 1/16W	
R599	ERJ3GEYJ220V	Chip, 22 Ω 1/16W	
R601	ERJ8GEY0R00V	Chip, 0 Ω 1/8W	
R602	ERJ3GEYJ103V	Chip, 10k Ω 1/16W	
R603	ERJ3GEYJ103V	Chip, 10k Ω 1/16W	
R604	ERJ3GEY0R00V	Chip, 0 Ω 1/16W	
R605	ERJ3GEYJ220V	Chip, 22 Ω 1/16W	
R606	ERJ3GEYJ220V	Chip, 22 Ω 1/16W	
R607	ERJ3GEYJ220V	Chip, 22 Ω 1/16W	
R608	ERJ3GEYJ220V	Chip, 22 Ω 1/16W	
R609	ERJ3GEYJ220V	Chip, 22 Ω 1/16W	
R610	ERJ3GEYJ103V	Chip, 10k Ω 1/16W	
R611	ERJ3GEYJ103V	Chip, 10k Ω 1/16W	
R612	ERJ3GEYJ103V	Chip, 10k Ω 1/16W	
R615	ERJ3GEYJ220V	Chip, 22 Ω 1/16W	
R616	ERJ3GEYJ220V	Chip, 22 Ω 1/16W	
R617	ERJ3GEYJ220V	Chip, 22 Ω 1/16W	
R618	ERJ3GEYJ220V	Chip, 22 Ω 1/16W	
R619	ERJ3GEYJ102V	Chip, 1k Ω 1/16W	
R620	ERJ3GEYJ220V	Chip, 22 Ω 1/16W	
R622	ERJ3GEY0R00V	Chip, 0 Ω 1/16W	
R623	ERJ3GEYJ220V	Chip, 22 Ω 1/16W	
R624	ERJ3GEYJ221V	Chip, 220 Ω 1/16W	
R625	ERJ3GEYJ472V	Chip, 4.7k Ω 1/16W	
R627	ERJ3GEYJ221V	Chip, 220 Ω 1/16W	
R628	ERJ3GEYJ472V	Chip, 4.7k Ω 1/16W	

Ref. No.	Part No.	Part Name & Description	Remarks
R629	ERJ3GEYJ220V	Chip, 22 Ω 1/16W	
R630	ERJ3GEY0R00V	Chip, 0 Ω 1/16W	
R631	ERJ3GEY0R00V	Chip, 0 Ω 1/16W	
R632	ERJ3GEY0R00V	Chip, 0 Ω 1/16W	
R633	ERJ3GEY0R00V	Chip, 0 Ω 1/16W	
R634	ERJ3GEY0R00V	Chip, 0 Ω 1/16W	
R635	ERJ3GEYJ472V	Chip, 4.7k Ω 1/16W	
R636	ERJ3GEYJ472V	Chip, 4.7k Ω 1/16W	
R637	ERJ3GEYJ221V	Chip, 220 Ω 1/16W	
R638	ERJ3GEYJ221V	Chip, 220 Ω 1/16W	
R639	ERJ3GEY0R00V	Chip, 0 Ω 1/16W	
R640	ERJ3GEYJ221V	Chip, 220 Ω 1/16W	
R641	ERJ3GEYJ221V	Chip, 220 Ω 1/16W	
R642	ERJ3GEYJ103V	Chip, 10k Ω 1/16W	
R643	ERJ3GEYJ101V	Chip, 100 Ω 1/16W	
R644	ERJ3GEYJ103V	Chip, 10k Ω 1/16W	
R645	ERJ3GEYJ184V	Chip, 180k Ω 1/16W	
R646	ERJ3GEYJ221V	Chip, 220 Ω 1/16W	
R647	ERJ3GEYJ221V	Chip, 220 Ω 1/16W	
R648	ERJ3GEYJ221V	Chip, 220 Ω 1/16W	
R649	ERJ3GEYJ221V	Chip, 220 Ω 1/16W	
R650	ERJ3GEYJ221V	Chip, 220 Ω 1/16W	
R651	ERJ3GEYJ221V	Chip, 220 Ω 1/16W	
R652	ERJ8GEYJ680V	Chip, 68 Ω 1/8W	
R653	ERJ8GEYJ680V	Chip, 68 Ω 1/8W	
R654	ERJ3GEY0R00V	Chip, 0 Ω 1/16W	
R655	ERJ3RBD103V	Metal Glaze, 10k Ω 1/16W	
R656	ERJ3RBD103V	Metal Glaze, 10k Ω 1/16W	
R657	ERJ3GEYJ223V	Chip, 22k Ω 1/16W	
R658	ERJ3GEYJ333V	Chip, 33k Ω 1/16W	
R659	ERJ3GEYJ223V	Chip, 22k Ω 1/16W	
R660	ERJ3GEYJ333V	Chip, 33k Ω 1/16W	
R661	ERJ3GEYJ220V	Chip, 22 Ω 1/16W	
R662	ERJ3GEYJ220V	Chip, 22 Ω 1/16W	
R666	ERJ3GEYJ103V	Chip, 10k Ω 1/16W	
R667	ERJ3GEYJ102V	Chip, 1k Ω 1/16W	
R668	ERJ3GEYJ473V	Chip, 47k Ω 1/16W	
R669	ERJ3GEYJ220V	Chip, 22 Ω 1/16W	
R670	ERJ3RBD103V	Metal Glaze, 10k Ω 1/16W	
R672	ERJ3GEYJ103V	Chip, 10k Ω 1/16W	
R674	ERJ6GEY0R00V	Chip, 0 Ω 1/10W	
R676	ERJ3GEYJ100V	Chip, 10 Ω 1/16W	
R701	ERJ14YJ390H	Chip, 39 Ω 1/4W	
R702	ERJ3GEYJ104V	Chip, 100k Ω 1/16W	
R703	ERJ3GEYJ102V	Chip, 1k Ω 1/16W	

Ref. No.	Part No.	Part Name & Description	Remarks
R704	ERJ3GEYJ472V	Chip, 4.7k Ω 1/16W	
R705	ERJ3GEYJ472V	Chip, 4.7k Ω 1/16W	
R706	ERJ6ENF5602V	Chip, 56k Ω 1/10W	
R707	ERJ6ENF2203V	Chip, 220k Ω 1/10W	
R708	ERJ6ENF6802V	Chip, 68k Ω 1/10W	
R709	ERJ6ENF1803V	Chip, 180k Ω 1/10W	
R710	ERJ3GEYJ472V	Chip, 4.7k Ω 1/16W	
R711	ERJ6ENF3901V	Chip, 3.9k Ω 1/10W	
R712	ERJ6ENF3901V	Chip, 3.9k Ω 1/10W	
R713	ERJ6ENF1201V	Chip, 1.2k Ω 1/10W	
R714	ERJ3GEYJ103V	Chip, 10k Ω 1/16W	
R715	ERJ3GEYJ103V	Chip, 10k Ω 1/16W	
R716	ERJ3GEYJ473V	Chip, 47k Ω 1/16W	
R717	ERJ12YJ470H	Chip, 47 Ω 1/2W	
R718	ERJ6GEY0R00V	Chip, 0 Ω 1/10W	
R719	ERJ6ENF4701V	Chip, 4.7k Ω 1/10W	
R720	ERJ6ENF3901V	Chip, 3.9k Ω 1/10W	
R721	ERJ6ENF1201V	Chip, 1.2k Ω 1/10W	
R722	ERJ6GEYJ562	Chip, 5.6k Ω 1/10W	
R723	ERJ12YJ821H	Chip, 820 Ω 1/2W	
R724	ERJ6GEYJ4R7	Chip, 4.7 Ω 1/10W	
R725	ERJ6GEYJ103	Chip, 10k Ω 1/10W	
R726	ERJ6GEYJ103	Chip, 10k Ω 1/10W	
R727	ERJ6GEYJ103	Chip, 10k Ω 1/10W	
R728	ERJ6GEYJ391	Chip, 390 Ω 1/10W	
R730	ERJ6GEYJ562	Chip, 5.6k Ω 1/10W	
R731	ERJ12YJ821H	Chip, 820 Ω 1/2W	
R732	ERJ6GEYJ471	Chip, 470 Ω 1/10W	
R750	ERJ3GEY0R00V	Chip, 0 Ω 1/16W	
R901	ERJ6ENF1002	Chip, 10k Ω 1/10W	
R902	ERJ6ENF3301V	Chip, 3.3k Ω 1/10W	
R903	ERJ3GEYJ561V	Chip, 560 Ω 1/16W	
R904	ERJ14YJ391H	Chip, 390 Ω 1/4W	
R905	ERJ6ENF5601V	Chip, 5.6k Ω 1/10W	
R906	ERJ6ENF5601V	Chip, 5.6k Ω 1/10W	
R907	ERJ6ENF8201V	Chip, 8.2k Ω 1/10W	
R908	ERJ6ENF4701V	Chip, 4.7k Ω 1/10W	
R909	ERJ6ENF4701V	Chip, 4.7k Ω 1/10W	
R910	ERJ6ENF3901V	Chip, 3.9k Ω 1/10W	
R911	ERJ6ENF1201V	Chip, 1.2k Ω 1/10W	
R912	ERJ3GEYJ561V	Chip, 560 Ω 1/16W	
R913	ERJ14YJ391H	Chip, 390 Ω 1/4W	
R914	ERJ3GEYJ561V	Chip, 560 Ω 1/16W	
R915	ERJ14YJ391H	Chip, 390 Ω 1/4W	
R916	ERJ3GEYJ472V	Chip, 4.7k Ω 1/16W	

Ref. No.	Part No.	Part Name & Description	Remarks
R918	ERJ6ENF4701V	Chip, 4.7k Ω 1/10W	
R920	ERJ12YJ1R0H	Chip, 1 Ω 1/2W	
R922	ERJ3GEYJ223V	Chip, 22k Ω 1/16W	
R923	ERJ3GEYJ513V	Chip, 51k Ω 1/16W	
R924	ERJ3GEYJ823V	Chip, 82k Ω 1/16W	
R925	ERJ6GEYJ100	Chip, 10 Ω 1/10W	
R927	ERJ3GEYJ302V	Chip, 3k Ω 1/16W	
R928	ERJ14YJ391H	Chip, 390 Ω 1/4W	
R929	ERJ6ENF2202	Chip, 22k Ω 1/10W	
R930	ERJ6ENF1002	Chip, 10k Ω 1/10W	
R931	ERJ3GEYJ101V	Chip, 100 Ω 1/16W	
R932	ERJ3GEYJ102V	Chip, 1k Ω 1/16W	
R933	ERJ3GEYJ561V	Chip, 560 Ω 1/16W	
R935	ERJ6ENF2202	Chip, 22k Ω 1/10W	
R936	ERJ6ENF1002	Chip, 10k Ω 1/10W	
R937	ERJ6GEY0R00V	Chip, 0 Ω 1/10W	
R938	ERJ3GEYJ102V	Chip, 1k Ω 1/16W	
R940	ERJ6ENF2202	Chip, 22k Ω 1/10W	
R941	ERJ6ENF1002	Chip, 10k Ω 1/10W	
R942	ERJ3GEYJ102V	Chip, 1k Ω 1/16W	
R944	ERJ6ENF4702	Chip, 47k Ω 1/10W	
R945	ERJ6ENF2202	Chip, 22k Ω 1/10W	
R946	ERJ6ENF1002	Chip, 10k Ω 1/10W	
R948	ERJ6ENF1501V	Chip, 1.5k Ω 1/10W	
R949	ERJ6ENF3301V	Chip, 3.3k Ω 1/10W	
R950	ERJ3GEYJ102V	Chip, 1k Ω 1/16W	
R951	ERJ6ENF1002	Chip, 10k Ω 1/10W	
R952	ERJ6ENF2202	Chip, 22k Ω 1/10W	
R954	ERJ3GEYJ102V	Chip, 1k Ω 1/16W	
R955	ERJ14YJ391H	Chip, 390 Ω 1/4W	
R956	ERJ6ENF1502V	Chip, 15k Ω 1/10W	
R957	ERJ3GEYJ561V	Chip, 560 Ω 1/16W	
R958	ERJ6GEYJ821	Chip, 820 Ω 1/10W	
R959	ERJ6ENF2001V	Chip, 2k Ω 1/10W	
R960	ERJ6ENF1202V	Chip, 12k Ω 1/10W	
R961	ERJ6ENF4702	Chip, 47k Ω 1/10W	
R962	ERJ6ENF1002	Chip, 10k Ω 1/10W	
R963	ERJ6ENF4702	Chip, 47k Ω 1/10W	
R964	ERJ6ENF1002	Chip, 10k Ω 1/10W	
R965	ERJ6GEY0R00V	Chip, 0 Ω 1/10W	
R966	ERJ3GEYJ102V	Chip, 1k Ω 1/16W	
R967	ERJ6ENF1002	Chip, 10k Ω 1/10W	
R968	ERJ3GEYJ102V	Chip, 1k Ω 1/16W	
R969	ERJ3GEYJ102V	Chip, 1k Ω 1/16W	
R970	ERJ3GEYJ102V	Chip, 1k Ω 1/16W	

Ref. No.	Part No.	Part Name & Description	Remarks
R971	ERJ3GEYJ102V	Chip, 1k Ω 1/16W	
R972	ERJ6ENF2202	Chip, 22k Ω 1/10W	
R974	ERJ6ENF4702	Chip, 47k Ω 1/10W	
R975	ERJ6ENF5601V	Chip, 5.6k Ω 1/10W	
R976	ERJ6ENF3301V	Chip, 3.3k Ω 1/10W	
R977	ERJ14YJ391H	Chip, 390 Ω 1/4W	
R978	ERJ3GEYJ561V	Chip, 560 Ω 1/16W	
R979	ERJ6ENF1002	Chip, 10k Ω 1/10W	
R980	ERJ6ENF3301V	Chip, 3.3k Ω 1/10W	
R984	ERJ6ENF4702	Chip, 47k Ω 1/10W	
R986	ERJ6ENF4702	Chip, 47k Ω 1/10W	
R987	ERJ6GEY0R00V	Chip, 0 Ω 1/10W	
R988	ERJ6GEY0R00V	Chip, 0 Ω 1/10W	
R992	ERJ3GEY0R00V	Chip, 0 Ω 1/16W	
R993	ERJ3GEY0R00V	Chip, 0 Ω 1/16W	
R994	ERJ3GEY0R00V	Chip, 0 Ω 1/16W	
R995	ERJ3GEY0R00V	Chip, 0 Ω 1/16W	
R996	ERJ3GEY0R00V	Chip, 0 Ω 1/16W	
R997	ERJ3GEY0R00V	Chip, 0 Ω 1/16W	
R998	ERJ3GEYJ562V	Chip, 5.6k Ω 1/16W	
R999	ERJ3GEYJ561V	Chip, 560 Ω 1/16W	
CONNECTORs			
CN51	YEAE5243730	Connector, 30P	
CN52	YEAE5274612	Connector, 12P	
CN101	YEAE5274514	Connector, 14P	
CN102	YEAE5274518	Connector, 18P	
CN103	YEAE52559102	Connector, 10P	
CN201	K1FA112B0014	Connector, 13P	
CN401	YEAJ011523A	RGB Input Cord, DIN 13P (6P+7P)	
CN403	K1FB120E0006	Connector, 20P	
CN601	K1MN22B00017	Connector, 22P	
CN701	YEAE012748	Connector, 16P	
CN702	YEAE5339803	Connector, 3P	
CN901	K1MN40A00005	Connector, 40P	
COILs			
FB51	J0JHC0000026	Coil	
FB52	J0JHC0000026	Coil	
FB53	J0JHC0000026	Coil	
FB54	J0JHC0000026	Coil	
FB111	J0JGC0000020	Coil	
FB123	J0JGC0000020	Coil	
FB202	J0JGC0000020	Coil	
FB203	J0JGC0000020	Coil	
FB204	J0JGC0000020	Coil	
FB205	J0JGC0000020	Coil	
FB206	J0JGC0000020	Coil	

Ref. No.	Part No.	Part Name & Description	Remarks
FB207	J0JGC0000020	Coil	
FB208	J0JGC0000020	Coil	
FB307	J0JGC0000020	Coil	
FB308	J0JGC0000020	Coil	
FB309	J0JGC0000020	Coil	
FB310	J0JGC0000020	Coil	
FB312	J0JGC0000020	Coil	
FB313	J0JGC0000020	Coil	
FB314	J0JGC0000020	Coil	
FB315	J0JGC0000020	Coil	
FB402	J0JGC0000020	Coil	
FB405	J0JGC0000020	Coil	
FB406	YELTBMHS800T	Coil	
FB410	J0JGC0000020	Coil	
FB411	J0JGC0000020	Coil	
FB412	J0JGC0000020	Coil	
FB417	J0JGC0000020	Coil	
FB418	J0JGC0000020	Coil	
FB419	J0JAC0000052	Coil	
FB420	J0JAC0000052	Coil	
FB421	J0JGC0000020	Coil	
FB440	J0JGC0000020	Coil	
FB503	J0JHC0000026	Coil	
FB504	J0JHC0000026	Coil	
FB505	J0JHC0000026	Coil	
FB506	YELTBLM21A10	Coil	
FB507	YELTBLM21A10	Coil	
FB508	J0JHC0000026	Coil	
FB510	J0JGC0000020	Coil	
FB511	J0JHC0000026	Coil	
FB512	YELTBLM21P3S	Coil	
FB513	J0JHC0000026	Coil	
FB514	J0JGC0000020	Coil	
FB601	J0JGC0000020	Coil	
FB602	J0JGC0000020	Coil	
FB603	J0JGC0000020	Coil	
FB604	J0JGC0000020	Coil	
FB605	J0JGC0000020	Coil	
FB606	J0JGC0000020	Coil	
FB607	J0JGC0000020	Coil	
FB608	J0JGC0000020	Coil	
FB701	J0JGC0000020	Coil	
FB702	J0JGC0000020	Coil	
FB703	J0JGC0000020	Coil	
FB905	J0JHC0000026	Coil	
FB906	J0JHC0000026	Coil	
FB907	J0JHC0000026	Coil	
FB908	J0JAC0000052	Coil	
FB909	J0JAC0000052	Coil	
FB910	J0JAC0000052	Coil	
FB911	J0JAC0000052	Coil	
FB912	J0JAC0000052	Coil	
FB913	J0JAC0000052	Coil	
FB914	J0JAC0000052	Coil	

Ref. No.	Part No.	Part Name & Description	Remarks
FB918	J0JAC0000052	Coil	
FB919	J0JAC0000052	Coil	
FB920	J0JAC0000052	Coil	
FB921	J0JAC0000052	Coil	
FB922	J0JGC0000020	Coil	
FB923	YELTBMHS800T	Coil	
FB924	YELTBMHS800T	Coil	
L101	YELT03N101JT	Coil	
L102	YELT03N101JT	Coil	
L202	YELT03N220JT	Coil	
L203	YELT03N101JT	Coil	
L501	YETQLM250S30	Coil	
L502	YELT03N220JT	Coil	
L601	YELT03N220JT	Coil	
L602	YELT03N101JT	Coil	
L901	G1C101Z00008	Coil	
L902	G1C101Z00008	Coil	
L903	G1C220Z00008	Coil	
L904	G1C220Z00005	Coil	
L906	G1C220Z00005	Coil	
L907	G1C220Z00005	Coil	
L908	G1C220Z00008	Coil	
L909	YELT03N220JT	Coil	
L910	G1C101Z00008	Coil	
L911	G1C220Z00005	Coil	
R592	YELTBLM21P3S	Coil	
SWITCH			
SW701	YEAS07184	Switch	
CRYSTALs			
XL301	H0J122500024	Crystal Oscillator	
XL302	H0J368500022	Crystal Oscillator	
XL501	H0J135500024	Crystal Oscillator	
XL601	H1A6554B0001	Crystal Oscillator	
NETWORK RESISTORs			
RA301	D1H822040002	Network Resistor	
RA302	D1H822040002	Network Resistor	
RA303	D1H822040002	Network Resistor	
RA304	D1H822040002	Network Resistor	
RA305	D1H822040002	Network Resistor	
RA306	D1H822040002	Network Resistor	
RA307	D1H822040002	Network Resistor	
RA308	D1H822040002	Network Resistor	
RA309	D1H822040002	Network Resistor	
RA310	D1H822040002	Network Resistor	
RA311	D1H822040002	Network Resistor	
RA312	D1H822040002	Network Resistor	
RA313	D1H822040002	Network Resistor	
RA314	D1H822040002	Network Resistor	

Ref. No.	Part No.	Part Name & Description	Remarks
RA315	D1H822040002	Network Resistor	
RA316	D1H822040002	Network Resistor	
RA317	D1H822040002	Network Resistor	
RA318	D1H822040002	Network Resistor	
RA319	D1H822040002	Network Resistor	
RA320	D1H822040002	Network Resistor	
RA501	D1H822040002	Network Resistor	
RA502	D1H822040002	Network Resistor	
RA503	D1H822040002	Network Resistor	
RA504	D1H822040002	Network Resistor	
RA505	D1H822040002	Network Resistor	
RA506	D1H822040002	Network Resistor	
RA507	D1H822040002	Network Resistor	
RA508	D1H822040002	Network Resistor	
RA509	D1H822040002	Network Resistor	
RA510	D1H882040001	Network Resistor	
RA511	D1H882040001	Network Resistor	
RA512	D1H822040002	Network Resistor	
RA513	D1H882040001	Network Resistor	
RA514	D1H882040001	Network Resistor	
RA515	D1H882040001	Network Resistor	
RA516	D1H882040001	Network Resistor	
RA517	D1H882040001	Network Resistor	
RA518	D1H882040001	Network Resistor	
RA519	D1H822040002	Network Resistor	
RA520	D1H822040002	Network Resistor	
RA521	D1H822040002	Network Resistor	
RA522	D1H822040002	Network Resistor	
RA523	D1H822040002	Network Resistor	
RA524	D1H882040001	Network Resistor	
RA525	D1H882040001	Network Resistor	
RA526	D1H882040001	Network Resistor	
RA527	D1H822040002	Network Resistor	
RA528	D1H822040002	Network Resistor	
RA529	D1H822040002	Network Resistor	
RA530	D1H882040001	Network Resistor	
RA531	D1H882040001	Network Resistor	
RA532	D1H882040001	Network Resistor	
RA533	D1H882040001	Network Resistor	
RA534	D1H822040002	Network Resistor	
RA535	D1H822040002	Network Resistor	
RA536	D1H822040002	Network Resistor	
RA537	D1H822040002	Network Resistor	
RA538	D1H822040002	Network Resistor	
RA539	D1H822040002	Network Resistor	
RA540	D1H822040002	Network Resistor	
RA541	D1H822040002	Network Resistor	
RA542	D1H822040002	Network Resistor	
RA543	D1H822040002	Network Resistor	
RA601	D1H822040002	Network Resistor	
RA602	D1H822040002	Network Resistor	
RA603	D1H822040002	Network Resistor	
RA604	D1H822040002	Network Resistor	
RA605	D1H822040002	Network Resistor	

Ref. No.	Part No.	Part Name & Description	Remarks
RA606	D1H822040002	Network Resistor	
RA607	D1H822040002	Network Resistor	
RA608	D1H822040002	Network Resistor	
RA609	D1H822040002	Network Resistor	
RA610	D1H822040002	Network Resistor	
RA611	D1H822040002	Network Resistor	
RA612	D1H822040002	Network Resistor	
RA613	D1H822040002	Network Resistor	
RA614	D1H822040002	Network Resistor	
RA615	D1H822040002	Network Resistor	
RA616	D1H822040002	Network Resistor	
RA617	D1H822040002	Network Resistor	
RA618	D1H822040002	Network Resistor	
RA619	D1H822040002	Network Resistor	
RA620	D1H822040002	Network Resistor	
RA621	D1H822040002	Network Resistor	
RA622	D1H822040002	Network Resistor	
RA623	D1H822040002	Network Resistor	
RA624	D1H822040002	Network Resistor	
FILTERs			
LC504	J0HAAB000018	Filter	
LC505	J0HAAB000018	Filter	
LC506	J0HAAB000018	Filter	
LC602	J0MAB0000044	Filter	
LC603	J0MAB0000045	Filter	
[E9430A] TFT Block			
IC's AND TRANSISTORs			
IC901	C0DBAZA00013	IC	
IC902	AN8049SH-E1	IC	
IC903	YEAMM5237ML	IC	
IC905	C0HBA0000135	IC	
IC906	YEAMM5216FP1	IC	
IC907	AN2526FH	IC	
IC908	C2BBFD000503	IC	
IC909	C0FBBD000065	IC	
IC910	C3EBDC000049	IC	
IC911	PNA4603H	IC	
IC912	C0ABBB000105	IC	
Q901	B1DZED000003	Transistor	
Q902	B1DZED000003	Transistor	
Q903	B1GHCFJN0003	Transistor	
Q904	B1GFCFJN0013	Transistor	
Q905	B1GBCFJJ0007	Transistor	
Q906	2SD218500L	Transistor	
Q907	2SB1440TX	Transistor	
Q908	B1BBAC000007	Transistor	
Q909	2SB1073TX	Transistor	
Q910	B1GBCFJJ0007	Transistor	
Q911	B1GBCFNA0010	Transistor	

Ref. No.	Part No.	Part Name & Description	Remarks
Q912	YEANC4081STX	Transistor	
Q913	B1GDCFJN0011	Transistor	
Q915	B1GBCFJJ0007	Transistor	
Q916	B1HFCFD00001	Transistor	
DIODEs			
D901	MA8056LMHTX	Diode	
D902	MA8056LMHTX	Diode	
D903	MA157TX	Diode	
D904	MA157TX	Diode	
D905	B0BD6R800002	Diode	
D906	B0BD6R800002	Diode	
D907	B0ACCK000005	Diode	
D908	B0ACCK000005	Diode	
D909	MAZ803300L	Diode	
D910	MAZ803300L	Diode	
D911	MAZ803300L	Diode	
D912	MAZ803300L	Diode	
D913	MA2X33800L	Diode	
D916	MA2J72900L	Diode	
D917	MA2J72900L	Diode	
D918	MA2J72900L	Diode	
D919	MA2J72900L	Diode	
D920	MA2J72900L	Diode	
D921	MA8056LMHTX	Diode	
D922	B3AEB0000037	Diode	
D923	B3AEB0000037	Diode	
D927	MA8056LMHTX	Diode	
D928	B3AEB0000037	Diode	
D929	MA8033LMHTX	Diode	
D930	B0ACCK000005	Diode	
D931	MA8056LMHTX	Diode	
D932	B0ACCK000005	Diode	
CAPACITORs			
C801	F1J1A2250004	Ceramic, 2.2 μF 10WV	
C802	F1J1A2250004	Ceramic, 2.2 μF 10WV	
C804	EEFCD0J470R	Electrolytic, 47 μF 6.3WV	
C805	ECST1AX226R	Tantalum, 22 μF 10WV	
C806	F1H0J1050010	Ceramic, 1 μF 6.3WV	
C807	F1H0J1050010	Ceramic, 1 μF 6.3WV	
C808	F1H0J1050010	Ceramic, 1 μF 6.3WV	
C809	YECUZ1C104KX	Ceramic, 0.1 μF 16WV	
C810	YECUZ1C104KX	Ceramic, 0.1 μF 16WV	
C811	YECUZ1C104KX	Ceramic, 0.1 μF 16WV	
C812	F1H0J1050010	Ceramic, 1 μF 6.3WV	
C813	F1H0J1050010	Ceramic, 1 μF 6.3WV	

Ref. No.	Part No.	Part Name & Description	Remarks
C814	F1H0J1050010	Ceramic, 1 μF 6.3WV	
C815	EEFCD0K330R	Electrolytic, 33 μF 8WV	
C816	F1J0J1060007	Ceramic, 10 μF 6.3WV	
C817	YECUZ1C104KX	Ceramic, 0.1 μF 16WV	
C818	YECUZ1C104KX	Ceramic, 0.1 μF 16WV	
C819	F1J0J1060007	Ceramic, 10 μF 6.3WV	
C820	F1J0J1060007	Ceramic, 10 μF 6.3WV	
C821	EEFCD0J470R	Electrolytic, 47 μF 6.3WV	
C822	YECUZ1C104KX	Ceramic, 0.1 μF 16WV	
C823	ECST1AX226R	Tantalum, 22 μF 10WV	
C824	F1H1A4740004	Ceramic, 0.47 μF 10WV	
C825	YECUZ1E223KX	Ceramic, 0.022 μF 25WV	
C826	F1H1H101A231	Ceramic, 100PF 50WV	
C827	F1H1H101A231	Ceramic, 100PF 50WV	
C828	YECUZ1H102KX	Ceramic, 1000PF 50WV	
C829	ECST1EX475R	Tantalum, 4.7 μF 25WV	
C830	YECUZ1C104KX	Ceramic, 0.1 μF 16WV	
C832	YECUZ1E223KX	Ceramic, 0.022 μF 25WV	
C833	YECUZ1C104KX	Ceramic, 0.1 μF 16WV	
C834	YECUZ1C104KX	Ceramic, 0.1 μF 16WV	
C835	YECUZ1E223KX	Ceramic, 0.022 μF 25WV	
C836	F1H0J1050010	Ceramic, 1 μF 6.3WV	
C837	YECUZ1H270JC	Ceramic, 27PF 50WV	
C838	YECUZ1C104KX	Ceramic, 0.1 μF 16WV	
C839	F1H1A4740004	Ceramic, 0.47 μF 10WV	
C840	YECUZ1H330JC	Ceramic, 33PF 50WV	
C841	YECUZ1H060DC	Ceramic, 6PF 50WV	
C842	F1K1C1060001	Ceramic, 10 μF 16WV	
C843	YECUZ1H102KX	Ceramic, 1000PF 50WV	
C844	YECUZ1H102KX	Ceramic, 1000PF 50WV	
C845	YECUZ1C104KX	Ceramic, 0.1 μF 16WV	
C846	F1H0J1050010	Ceramic, 1 μF 6.3WV	
C847	YECUZ1H102KX	Ceramic, 1000PF 50WV	
C848	YECUZ1H103KX	Ceramic, 0.01 μF 50WV	
C849	YECUZ1H103KX	Ceramic, 0.01 μF 50WV	
C850	YECUZ1H103KX	Ceramic, 0.01 μF 50WV	
C851	YECUZ1H103KX	Ceramic, 0.01 μF 50WV	
C852	F3H1E1560006	Tantalum, 15 μF 25WV	
C855	EEFCD0G560R	Electrolytic, 56 μF 4WV	
C856	YECUZ1C104KX	Ceramic, 0.1 μF 16WV	
C857	F4Z1D2260001	Electrolytic, 22 μF 20WV	

Ref. No.	Part No.	Part Name & Description	Remarks
C860	YECUZ1C104KX	Ceramic, 0.1 μ F 16WV	
C861	EEFCD0J470R	Electrolytic, 47 μ F 6.3WV	
C862	F1H0J1050010	Ceramic, 1 μ F 6.3WV	
C863	YECUZ1C104KX	Ceramic, 0.1 μ F 16WV	
C864	F1J0J1060007	Ceramic, 10 μ F 6.3WV	
C865	YECUZ1C104KX	Ceramic, 0.1 μ F 16WV	
C901	F1K1C1060001	Ceramic, 10 μ F 16WV	
C902	F1K1C1060001	Ceramic, 10 μ F 16WV	
C903	F1K1C1060001	Ceramic, 10 μ F 16WV	
C904	F1K1C1060001	Ceramic, 10 μ F 16WV	
C905	F1K1C1060001	Ceramic, 10 μ F 16WV	
C906	F1K1C1060001	Ceramic, 10 μ F 16WV	
C909	F1H1E103A011	Ceramic, 0.01 μ F 25WV	
C910	F1H1A4740004	Ceramic, 0.47 μ F 10WV	
C911	F1J0J1060007	Ceramic, 10 μ F 6.3WV	
C912	YECUZ1C104KX	Ceramic, 0.1 μ F 16WV	
C913	F1H1E103A011	Ceramic, 0.01 μ F 25WV	
C914	F1H1H152A201	Ceramic, 1500PF 50WV	
C915	F1J0J4750003	Ceramic, 4.7 μ F 6.3WV	
C916	F1H1C473A005	Ceramic, 0.047 μ F 16WV	
C917	YECUZ1H221JC	Ceramic, 220PF 50WV	
C918	YECUZ1H682KX	Ceramic, 6800PF 50WV	
C919	YECUZ1C104KX	Ceramic, 0.1 μ F 16WV	
C920	F1H1C473A005	Ceramic, 0.047 μ F 16WV	
C921	YECUZ1H103KX	Ceramic, 0.01 μ F 50WV	
C922	F1K1C1060001	Ceramic, 10 μ F 16WV	
C923	YECUV1C225KX	Ceramic, 2.2 μ F 16WV	
C924	F1L3F2200002	Ceramic, 22PF 3160WV	
C925	YECUZ1C333KX	Ceramic, 0.033 μ F 16WV	
C926	YECUZ1C104KX	Ceramic, 0.1 μ F 16WV	
C927	F1K1C1060001	Ceramic, 10 μ F 16WV	
C928	F1K1C1060001	Ceramic, 10 μ F 16WV	
C929	YECUZ1C104KX	Ceramic, 0.1 μ F 16WV	
C930	YECUS1C334KX	Ceramic, 0.33 μ F 16WV	
C931	YECUS1C334KX	Ceramic, 0.33 μ F 16WV	
C933	YECUZ1H332KX	Ceramic, 3300PF 50WV	
C935	YECUZ1C104KX	Ceramic, 0.1 μ F 16WV	
C936	YECUZ1H103KX	Ceramic, 0.01 μ F 50WV	
C937	YECUZ1H103KX	Ceramic, 0.01 μ F 50WV	
C938	YECUZ1H221JC	Ceramic, 220PF 50WV	
C939	F1J1C1050013	Ceramic, 1 μ F 16WV	

Ref. No.	Part No.	Part Name & Description	Remarks
C940	F1L1E1060015	Ceramic, 10 μ F 25WV	
C941	F1L1E1060015	Ceramic, 10 μ F 25WV	
C942	F1K1C1060001	Ceramic, 10 μ F 16WV	
C943	F1K1C1060001	Ceramic, 10 μ F 16WV	
C944	F1L1E1060015	Ceramic, 10 μ F 25WV	
C945	F1K1C1060001	Ceramic, 10 μ F 16WV	
C946	F1L1C4750006	Ceramic, 4.7 μ F 16WV	
C947	F1H1H104A783	Ceramic, 0.1 μ F 50WV	
C948	F1H1H104A783	Ceramic, 0.1 μ F 50WV	
C949	F1H0J1050010	Ceramic, 1 μ F 6.3WV	
C950	F1J1C1050013	Ceramic, 1 μ F 16WV	
C951	F1H1H470A231	Ceramic, 47PF 50WV	
C952	F1H1H101A231	Ceramic, 100PF 50WV	
C953	YECUZ1H102KX	Ceramic, 1000PF 50WV	
C954	YECUS1C334KX	Ceramic, 0.33 μ F 16WV	
C955	F3G1C226A001	Tantalum, 22 μ F 16WV	
C956	F1H0J1050010	Ceramic, 1 μ F 6.3WV	
C957	F1J0J1060007	Ceramic, 10 μ F 6.3WV	
C965	YECUZ1C104KX	Ceramic, 0.1 μ F 16WV	
C966	F3G1C226A001	Tantalum, 22 μ F 16WV	
C967	YECUZ1C104KX	Ceramic, 0.1 μ F 16WV	
C973	F1J0J1060007	Ceramic, 10 μ F 6.3WV	
C974	F1H0J1050010	Ceramic, 1 μ F 6.3WV	
C976	F1H1H104A783	Ceramic, 0.1 μ F 50WV	
C977	YECUZ1H561KX	Ceramic, 560PF 50WV	
C978	F1H1H104A783	Ceramic, 0.1 μ F 50WV	
C979	YECUU1C106ZF	Tantalum, 10 μ F 16WV	
C980	F1J0J1060007	Ceramic, 10 μ F 6.3WV	
C981	F1H1H104A783	Ceramic, 0.1 μ F 50WV	
C982	YECUZ1H102KX	Ceramic, 1000PF 50WV	
C983	F1H1H104A783	Ceramic, 0.1 μ F 50WV	
C984	YECUZ1H121JC	Ceramic, 120PF 50WV	
C988	F1H1H152A201	Ceramic, 1500PF 50WV	
C989	YECUZ1C104KX	Ceramic, 0.1 μ F 16WV	
C990	YECUZ1C104KX	Ceramic, 0.1 μ F 16WV	
C991	ECST1AX226R	Tantalum, 22 μ F 10WV	
C992	ECST1AX226R	Tantalum, 22 μ F 10WV	
C993	YECUZ1C104KX	Ceramic, 0.1 μ F 16WV	
C994	YECUZ1C104KX	Ceramic, 0.1 μ F 16WV	
C995	F1H1H152A201	Ceramic, 1500PF 50WV	
C998	F1K1C1060001	Ceramic, 10 μ F 16WV	

Ref. No.	Part No.	Part Name & Description	Remarks
C999	F1K1C1060001	Ceramic, 10 μ F 16WV	
RESISTORs			
L951	ERJ6GEY0R00V	Chip, 0 Ω 1/10W	
L952	ERJ6GEY0R00V	Chip, 0 Ω 1/10W	
L953	ERJ6GEY0R00V	Chip, 0 Ω 1/10W	
L954	ERJ6GEY0R00V	Chip, 0 Ω 1/10W	
R811	ERJ3GEYJ103V	Chip, 10k Ω 1/16W	
R812	ERJ3GEYJ103V	Chip, 10k Ω 1/16W	
R813	ERJ3GEYJ473V	Chip, 47k Ω 1/16W	
R814	ERJ3GEYJ683V	Chip, 68k Ω 1/16W	
R815	ERJ3GEYJ393V	Chip, 39k Ω 1/16W	
R816	ERJ3GEYJ105V	Chip, 1M Ω 1/16W	
R817	ERJ3GEYJ683V	Chip, 68k Ω 1/16W	
R818	ERJ3GEYJ103V	Chip, 10k Ω 1/16W	
R819	ERJ3GEYJ153V	Chip, 15k Ω 1/16W	
R820	ERJ3GEYJ103V	Chip, 10k Ω 1/16W	
R821	ERJ3GEY0R00V	Chip, 0 Ω 1/16W	
R822	ERJ3GEYJ474V	Chip, 470k Ω 1/16W	
R823	ERJ3GEYJ101V	Chip, 100 Ω 1/16W	
R824	ERJ3GEYJ103V	Chip, 10k Ω 1/16W	
R830	ERJ3GEYJ153V	Chip, 15k Ω 1/16W	
R831	ERJ3GEYJ102V	Chip, 1k Ω 1/16W	
R833	ERJ3GEYJ332V	Chip, 3.3k Ω 1/16W	
R834	ERJ3GEYJ102V	Chip, 1k Ω 1/16W	
R835	ERJ3GEYJ102V	Chip, 1k Ω 1/16W	
R838	ERJ3GEYJ102V	Chip, 1k Ω 1/16W	
R842	ERJ3GEYJ102V	Chip, 1k Ω 1/16W	
R843	ERJ3GEYJ102V	Chip, 1k Ω 1/16W	
R844	ERJ3GEYJ102V	Chip, 1k Ω 1/16W	
R845	ERJ3GEYJ470V	Chip, 47 Ω 1/16W	
R846	ERJ3GEYJ470V	Chip, 47 Ω 1/16W	
R847	ERJ3GEYJ470V	Chip, 47 Ω 1/16W	
R848	ERJ3GEYJ470V	Chip, 47 Ω 1/16W	
R849	ERJ3GEYJ102V	Chip, 1k Ω 1/16W	
R850	ERJ3GEYJ563V	Chip, 56k Ω 1/16W	
R851	ERJ3GEYJ103V	Chip, 10k Ω 1/16W	
R852	ERJ3GEYJ101V	Chip, 100 Ω 1/16W	
R853	ERJ3GEYJ470V	Chip, 47 Ω 1/16W	
R854	ERJ3GEYJ224V	Chip, 220k Ω 1/16W	
R855	ERJ3GEYJ224V	Chip, 220k Ω 1/16W	
R856	ERJ3EKF1002V	Carbon, 10k Ω 1/16W	
R857	ERJ3GEYJ222V	Chip, 2.2k Ω 1/16W	
R858	ERJ3GEYJ184V	Chip, 180k Ω 1/16W	

Ref. No.	Part No.	Part Name & Description	Remarks
R859	ERJ3GEYJ471V	Chip, 470 Ω 1/16W	
R860	ERJ3GEYJ103V	Chip, 10k Ω 1/16W	
R861	ERJ3GEYJ121V	Chip, 120 Ω 1/16W	
R862	ERJ3GEYJ105V	Chip, 1M Ω 1/16W	
R863	ERJ6GEYJ565V	Chip, 5.6M Ω 1/10W	
R864	ERJ3GEYJ512V	Chip, 5.1k Ω 1/16W	
R865	ERJ3GEYJ331V	Chip, 330 Ω 1/16W	
R866	ERJ3GEYJ272V	Chip, 2.7k Ω 1/16W	
R868	ERJ3GEYJ681V	Chip, 680 Ω 1/16W	
R870	ERJ3GEYJ332V	Chip, 3.3k Ω 1/16W	
R871	ERJ3GEYJ391V	Chip, 390 Ω 1/16W	
R872	ERJ3GEYJ153V	Chip, 15k Ω 1/16W	
R873	ERJ3GEYJ153V	Chip, 15k Ω 1/16W	
R880	ERJ3GEYJ105V	Chip, 1M Ω 1/16W	
R881	ERJ3GEYJ103V	Chip, 10k Ω 1/16W	
R882	ERJ3GEYJ103V	Chip, 10k Ω 1/16W	
R883	ERJ3GEY0R00V	Chip, 0 Ω 1/16W	
R884	ERJ3RBD272V	Metal Glaze, 2.7k Ω 1/16W	
R885	ERJ3RBD222V	Metal Glaze, 2.2k Ω 1/16W	
R886	ERJ3GEYJ332V	Chip, 3.3k Ω 1/16W	
R900	ERJ6GEY0R00V	Chip, 0 Ω 1/10W	
R901	ERJ3GEYJ822V	Chip, 8.2k Ω 1/16W	
R902	ERJ3GEYJ153V	Chip, 15k Ω 1/16W	
R903	ERJ3GEYJ153V	Chip, 15k Ω 1/16W	
R904	ERJ3GEYJ153V	Chip, 15k Ω 1/16W	
R905	ERJ8GEYJ1R5V	Chip, 1.5 Ω 1/8W	
R908	ERJ6GEY0R00V	Chip, 0 Ω 1/10W	
R909	ERJ6GEY0R00V	Chip, 0 Ω 1/10W	
R911	ERJ3GEYJ563V	Chip, 56k Ω 1/16W	
R912	ERJ3GEYJ333V	Chip, 33k Ω 1/16W	
R913	ERJ3RED224V	Metal Film, 220k Ω 1/16W	
R914	ERJ3GEYJ472V	Chip, 4.7k Ω 1/16W	
R915	ERJ3RBD513V	Metal Glaze, 51k Ω 1/16W	
R916	ERJ3GEYJ103V	Chip, 10k Ω 1/16W	
R917	ERJ3GEYJ473V	Chip, 47k Ω 1/16W	
R919	ERJ3GEYJ563V	Chip, 56k Ω 1/16W	
R920	ERJ3GEYJ103V	Chip, 10k Ω 1/16W	
R921	ERJ3RBD431V	Metal Glaze, 430 Ω 1/16W	
R922	ERJ3GEYJ152V	Chip, 1.5k Ω 1/16W	
R923	ERJ3GEYJ472V	Chip, 4.7k Ω 1/16W	
R925	ERJ3GEYJ391V	Chip, 390 Ω 1/16W	
R926	ERJ3GEYJ391V	Chip, 390 Ω 1/16W	
R929	ERJ3GEYJ101V	Chip, 100 Ω 1/16W	
R930	ERJ3GEYJ102V	Chip, 1k Ω 1/16W	
R931	ERJ3GEYJ334V	Chip, 330k Ω 1/16W	

Ref. No.	Part No.	Part Name & Description	Remarks
R932	ERJ3GEYJ334V	Chip, 330k Ω 1/16W	
R933	ERJ3GEYJ103V	Chip, 10k Ω 1/16W	
R934	ERJ3GEY0R00V	Chip, 0 Ω 1/16W	
R935	ERJ3GEY0R00V	Chip, 0 Ω 1/16W	
R936	ERJ3RBD272V	Metal Glaze, 2.7k Ω 1/16W	
R937	ERJ3RBD562V	Metal Glaze, 5.6k Ω 1/16W	
R938	ERJ6GEYJ1R0V	Chip, 1 Ω 1/10W	
R939	ERJ3EKF4701V	Carbon, 4.7k Ω 1/16W	
R941	ERJ3EKF8201V	Carbon, 8.2k Ω 1/16W	
R942	ERJ3EKF1003V	Carbon, 100k Ω 1/16W	
R943	ERJ3EKF1003V	Carbon, 100k Ω 1/16W	
R944	ERJ6GEY0R00V	Chip, 0 Ω 1/10W	
R945	ERJ3GEYJ331V	Chip, 330 Ω 1/16W	
R946	ERJ3GEYJ331V	Chip, 330 Ω 1/16W	
R947	ERJ3GEYJ103V	Chip, 10k Ω 1/16W	
R948	ERJ3GEYJ473V	Chip, 47k Ω 1/16W	
R949	ERJ3GEYJ152V	Chip, 1.5k Ω 1/16W	
R950	ERJ3GEYJ103V	Chip, 10k Ω 1/16W	
R951	ERJ3GEYJ103V	Chip, 10k Ω 1/16W	
R952	ERJ3GEYJ103V	Chip, 10k Ω 1/16W	
R953	ERJ3GEYJ223V	Chip, 22k Ω 1/16W	
R954	ERJ3GEYJ154V	Chip, 150k Ω 1/16W	
R955	ERJ3GEYJ103V	Chip, 10k Ω 1/16W	
R956	ERJ3GEYJ562V	Chip, 5.6k Ω 1/16W	
R957	ERJ3GEYJ153V	Chip, 15k Ω 1/16W	
R958	ERJ3GEYJ103V	Chip, 10k Ω 1/16W	
R959	ERJ3GEYJ103V	Chip, 10k Ω 1/16W	
R960	ERJ3GEYJ4R7V	Chip, 4.7 Ω 1/16W	
R961	ERJ3GEYJ221V	Chip, 220 Ω 1/16W	
R962	ERJ3GEYJ103V	Chip, 10k Ω 1/16W	
R963	ERJ3GEYJ103V	Chip, 10k Ω 1/16W	
R964	ERJ3GEYJ103V	Chip, 10k Ω 1/16W	
R965	ERJ3GEYJ102V	Chip, 1k Ω 1/16W	
R966	ERJ3GEYJ221V	Chip, 220 Ω 1/16W	
R967	ERJ3GEYJ104V	Chip, 100k Ω 1/16W	
R968	ERJ3GEYJ102V	Chip, 1k Ω 1/16W	
R972	ERJ3GEY0R00V	Chip, 0 Ω 1/16W	
R973	ERJ3GEYJ102V	Chip, 1k Ω 1/16W	
R974	ERJ3GEYJ472V	Chip, 4.7k Ω 1/16W	
R975	ERJ3GEYJ101V	Chip, 100 Ω 1/16W	
R976	ERJ3GEYJ102V	Chip, 1k Ω 1/16W	
R977	ERJ3GEYJ221V	Chip, 220 Ω 1/16W	
R978	ERJ3GEYJ221V	Chip, 220 Ω 1/16W	
R979	ERJ3GEYJ222V	Chip, 2.2k Ω 1/16W	
R980	ERJ3GEYJ472V	Chip, 4.7k Ω 1/16W	

Ref. No.	Part No.	Part Name & Description	Remarks
R981	ERJ3GEYJ472V	Chip, 4.7k Ω 1/16W	
R983	ERJ3GEYJ101V	Chip, 100 Ω 1/16W	
R984	ERJ3GEYJ474V	Chip, 470k Ω 1/16W	
R985	ERJ3GEYJ221V	Chip, 220 Ω 1/16W	
R986	ERJ3GEYJ221V	Chip, 220 Ω 1/16W	
R987	ERJ3RBD472V	Metal Glaze, 4.7k Ω 1/16W	
R988	ERJ3GEYJ221V	Chip, 220 Ω 1/16W	
R989	ERJ3GEYJ221V	Chip, 220 Ω 1/16W	
R990	ERJ3GEYJ102V	Chip, 1k Ω 1/16W	
R991	ERJ3GEYJ102V	Chip, 1k Ω 1/16W	
R992	ERJ3RBD123V	Metal Glaze, 12k Ω 1/16W	
R993	ERJ3RBD202V	Metal Glaze, 2k Ω 1/16W	
CONNECTORs			
CN901	K1KB30B00015	Connector, 30P	
CN902	K1MN08B00074	Connector, 8P	
CN903	K1KA02B00100	Connector, 2P	
CN904	K1MN08B00074	Connector, 8P	
CN905	K1MN08B00074	Connector, 8P	
CN906	K1MN30B00049	Connector, 30P	
COILs			
FB901	J0JGC0000020	Coil	
FB903	J0JBC0000010	Coil	
FB904	J0JBC0000010	Coil	
FB905	J0JBC0000010	Coil	
FB906	J0JBC0000010	Coil	
FB907	J0JBC0000010	Coil	
FB908	J0JBC0000010	Coil	
FB909	J0JBC0000010	Coil	
FB910	J0JBC0000012	Coil	
FB911	J0JBC0000012	Coil	
FB912	J0JBC0000012	Coil	
FB913	J0JBC0000010	Coil	
FB914	J0JBC0000010	Coil	
FB915	J0JBC0000010	Coil	
FB916	J0JBC0000010	Coil	
FB917	J0JBC0000010	Coil	
L901	J0JHC0000026	Coil	
L904	G1A101C00012	Coil	
L905	G1A101C00012	Coil	
L906	G1A101C00012	Coil	
L907	YELT03N470JT	Coil	
L908	YELT03N470JT	Coil	
L909	YELTBLM1B601	Coil	
L910	ELJFC1R2JF	Choke Coil	
L911	J0JHC0000026	Coil	
L912	YELTBLM1B601	Coil	
L913	YELTBLM1B601	Coil	

Ref. No.	Part No.	Part Name & Description	Remarks
L914	YELTBLM1B601	Coil	
L915	YELT03N470JT	Coil	
L916	J0JHC0000026	Coil	
L917	YELT03N100KT	Coil	
L918	YELT03N470JT	Coil	
L919	YELT03N470JT	Coil	
L922	YELTBLM1B601	Coil	
L923	YELTBLM1B601	Coil	
SWITCHes			
SW901	K0H1BB000044	Switch	
SW902	K0H1BB000044	Switch	
SW904	K0H1BB000044	Switch	
CRYSTALs			
XL901	H2D800400002	Ceramic Oscillator	
XL902	H0J357400044	Crystal Oscillator	
NETWORK RESISTORs			
RA901	D1H810440003	Network Resistor	
RA902	D1H810240004	Network Resistor	
RA903	D1H810140004	Network Resistor	
RA904	D1H810140004	Network Resistor	
TRANSFORMER			
L902	ETJV18ZE2ZAB	Transformer	
[E9431Aa/b] Display/SW Block			
IC's AND TRANSISTORs			
IC1	C0HBA0000138	IC	
IC2	B3MBZ0000006	IC	
Q1	XN0438100L	Transistor	
Q2	YEANC114YUTX	Transistor	
DIODEs			
D4	B3AEB0000037	Diode	
D5	B3AEB0000037	Diode	
D6	B3AEB0000037	Diode	
D7	B3AEB0000037	Diode	
D8	B3AEB0000037	Diode	
D9	B3AEB0000037	Diode	
D10	B3AEB0000037	Diode	
D11	B3AEB0000037	Diode	
D12	B3AFB0000039	Diode	
D13	MA8056LMHTX	Diode	
D14	MA8056LMHTX	Diode	
D15	MA8056LMHTX	Diode	

Ref. No.	Part No.	Part Name & Description	Remarks
D16	MA8056LMHTX	Diode	
D17	MA8056LMHTX	Diode	
D18	MA8056LMHTX	Diode	
D19	MA8056LMHTX	Diode	
D20	B0BC8R100002	Diode	
D51	B3AEB0000037	Diode	
D53	B3AEB0000037	Diode	
D54	B3AEB0000037	Diode	
D56	MA8056LMHTX	Diode	
CAPACITORs			
C1	YECUZ1C104KX	Ceramic, 0.1 μF 16WV	
C2	YECUZ1C104KX	Ceramic, 0.1 μF 16WV	
C3	YECUZ1H102KX	Ceramic, 1000PF 50WV	
C4	F1J1A2250004	Ceramic, 2.2 μF 10WV	
C5	F1H1H104A783	Ceramic, 0.1 μF 50WV	
C6	F1J1A2250004	Ceramic, 2.2 μF 10WV	
C7	F1H1H104A783	Ceramic, 0.1 μF 50WV	
C8	F1H1H104A783	Ceramic, 0.1 μF 50WV	
C9	YECUZ1H221JC	Ceramic, 220PF 50WV	
C10	F1H1H104A783	Ceramic, 0.1 μF 50WV	
C11	F1H1H104A783	Ceramic, 0.1 μF 50WV	
C12	F1H1H104A783	Ceramic, 0.1 μF 50WV	
C13	F1J0J1060007	Ceramic, 10 μF 6.3WV	
C14	YECUZ1C104KX	Ceramic, 0.1 μF 16WV	
C15	YECUZ1C104KX	Ceramic, 0.1 μF 16WV	
C51	F1J1H103A673	Ceramic, 0.01 μF 50WV	
C52	YECUZ1H103KX	Ceramic, 0.01 μF 50WV	
RESISTORs			
R3	ERJ3GEYJ101V	Chip, 100 Ω 1/16W	
R4	ERJ3GEYJ101V	Chip, 100 Ω 1/16W	
R6	ERJ3GEYJ122V	Chip, 1.2k Ω 1/16W	
R7	ERJ3GEYJ122V	Chip, 1.2k Ω 1/16W	
R8	ERJ3GEYJ122V	Chip, 1.2k Ω 1/16W	
R9	ERJ3GEYJ471V	Chip, 470 Ω 1/16W	
R10	ERJ3GEYJ471V	Chip, 470 Ω 1/16W	
R11	ERJ3GEYJ471V	Chip, 470 Ω 1/16W	
R12	ERJ3GEYJ471V	Chip, 470 Ω 1/16W	
R13	ERJ3GEYJ471V	Chip, 470 Ω 1/16W	
R14	ERJ6GEYJ471	Chip, 470 Ω 1/10W	
R15	ERJ3GEYJ101V	Chip, 100 Ω 1/16W	
R16	ERJ3GEYJ101V	Chip, 100 Ω 1/16W	

Ref. No.	Part No.	Part Name & Description	Remarks
R17	ERJ6GEYJ271	Chip, 270 Ω 1/10W	
R18	ERJ6GEYJ4R7	Chip, 4.7 Ω 1/10W	
R19	ERJ3GEYJ102V	Chip, 1k Ω 1/16W	
R20	ERJ3GEYJ102V	Chip, 1k Ω 1/16W	
R21	ERJ3GEYJ102V	Chip, 1k Ω 1/16W	
R22	ERJ3GEYJ102V	Chip, 1k Ω 1/16W	
R23	ERJ3GEYJ271V	Chip, 270 Ω 1/16W	
R25	ERJ3GEYJ333V	Chip, 33k Ω 1/16W	
R26	ERJ3GEYJ472V	Chip, 4.7k Ω 1/16W	
R27	ERJ3GEYJ472V	Chip, 4.7k Ω 1/16W	
R28	ERJ3GEYJ472V	Chip, 4.7k Ω 1/16W	
R29	ERJ3GEYJ472V	Chip, 4.7k Ω 1/16W	
R31	ERJ3GEYJ103V	Chip, 10k Ω 1/16W	
R32	ERJ3GEYJ103V	Chip, 10k Ω 1/16W	
R51	ERJ3GEYJ391V	Chip, 390 Ω 1/16W	
R53	ERJ3GEYJ391V	Chip, 390 Ω 1/16W	
R54	ERJ3GEYJ391V	Chip, 390 Ω 1/16W	
R56	ERJ6RBD332V	Metal Film, 3.3k Ω 1/10W	
R57	ERJ3RBD682V	Metal Glaze, 6.8k Ω 1/16W	
R58	ERJ6RBD223V	Metal Film, 22k Ω 1/10W	
CONNECTORs			
CN1	K1MN18B00077	Connector, 18P	
CN51	YEAE52559102	Connector, 10P	
SWITCHes			
JOY51	K0MGZ9000001	Switch	
SW1	K9AA01500017	Switch	
SW2	EVQPJX05M	Switch	
SW3	EVQPJX05M	Switch	
SW4	EVQPJX05M	Switch	
SW5	EVQPJX05M	Switch	
SW6	EVQPJX05M	Switch	
LCD			
LCD1	L5AABGB00005	LCD (Display)	
Accessories			
PRINTINGs			
	YEFM284237	Operating Instructions	
	YEFM293264	Installation Instructions	
INSTALLATION PARTs			

Ref. No.	Part No.	Part Name & Description	Remarks
	YEFX9995145	Remote Control Unit	
	CR2025/1F	Lithium Battery	⚠
	YEAA12692A	TV Antenna (R)	
	YEAA12693A	TV Antenna (L)	
	YEFX9991793	Wiping Cloth	
	YEP9FZ2739	Trim Plate	
	YEFG012694	Mounting Collar	
	YEFX0052714	Mounting Spring	
	YEP9FZ2714	Accessory Part or Tool (Bolt, Tapping, Nut)	
	YEFG04019	Rear Support Strap	
	YEP9BS1206	Screw Kit (Round Head, Flat-Head, Round Head)	
	YEP9FZ2761	Spacer, Double-Faced Adhesive Tape (for spacer)	
	YEP9BS1194	Screw Kit (Round Head, Tapping, Nut)	
	YEFG021010A	Mounting Bracket	
	YEFG012424	Base Bracket	
	YEP9FZ3042	Double-Faced Adhesive Tape (for hide-away unit), Velcro Tape	
	YEP9FZ3041	Antenna Clamp, Cord Clamp (for antenna)	
	YEAJ012002	Power Connector (for display unit), Reverse Extension Cord (for rear view camera), Clip Connector	
	YEAJ071659	Display Unit/ Hide-away Unit Connecting Cord	
	YEAJ012003	Power Connector (for hide-away unit)	
	YEAJ09271	Ground Lead	
	YEAA09141	Radio Antenna Extension Cord	
	YEAJ071463	Center Speaker Lead, Center Speaker Extension Lead	
	K1HB12FC0002	Audio Cable	
Mechanical Parts			
MISCELLANEOUS			
F1	XBB1F50NS5	Fuse, 5A	⚠
AP1	YEAP2882	Flexible PCB, Display	
AP2	YEAP2871C	Flexible PCB, TFT	
AT1	YEATSD00405	Terminal	
AT2	YEATSD00405	Terminal	
AT3	YEATSD00405	Terminal	
AT4	YEATSD00405	Terminal	
AT5	YEATSD00405	Terminal	
AT6	YEATSD00405	Terminal	
AT7	YEATSD00405	Terminal	
CNP1	K9ZZ00001162	Connector, 30P	
CNP2	K9ZZ00001161	Connector, 12P	
CNP3	K9ZZ00001160	Connector, 14P	
CNP4	K9ZZ00001164	Connector, 10P	
LCD1	EDT70WZQM028	LCD (TFT)	
M1	UDQFBFM21	DC Motor 2.3w	
SW1	EMU601A2M033	Touch Panel Switch	
UNT1	RD-SD004	SD Module	
1	YEP9FX313	Slide Mechanism Ass'y	
2	YEFX0052716	Spring, (L)	
3	YEFX0052717	Spring, (R)	
4	YEFG02973	Transportation Bracket	
6	YEFA131926	Plate, TFT PCB	

Ref. No.	Part No.	Part Name & Description	Remarks
7	YEP0PT9430A0	TFT PCB w/Component	RTL
8	YEFX9993226	Pad, TFT PCB	
9	YEFX9995092	Pad, TFT PCB	
10	YEFV012410	Insulator, TFT PCB	
11	YEFX0217048	Bracket(U), LCD1(TFT)	
13	YEFV022019	Color Screen	
15	YEFV021954	Optical Shade, LCD1(TFT)	
16	YEFX0217049	Bracket(B), LCD1(TFT)	
17	YEFC028352	Monitor Cover Ass'y	
18	YEFE139080	Button, EJECT	
19	YEFE139079	Button, TILT/OPEN/CLOSE	
20	YEFA08701	Chassis, Rear	
21	YEFS011992	Pad, M1	
22	YEFX0217052	Bracket, M1	
23	YEFV03905	Magnetic Shield(U), Deck	
24	YEFV012411	Insulator(A), Deck	
25	YEFX9995114	Pad, Deck	
26	YEFV012453	Insulator(B), Deck	
29	YEFX0217050	Bracket, Deck	
30	YEFM031415A	Laser Seal	
31	YEFV03936	Magnetic Shield(B), Deck	
33	YEFX0052247	Spring, ENTER	
34	YEFX0013054	Prism Mirror	
35	YEFC028331	Escutcheon Ass'y	
36	YEFE139084	Button, ENTER	
37	YEFK061210	Holder, LCD1(Display)	
38	YEFR07135	Rubber Contact	
39	YEFX0013011	Prism Mirror, LCD1(Display)	
40	YEFV022007	Color Screen, LCD1(Display)	
42	YEFX0217054	Bracket, LCD1(Display)	
43	YEFX9993261	Pad	
44	YEFS02530	Pad, Pannel Ass'y	
45	YEFA131931	Case, Pannel Ass'y	
46	YEP0PT9431A0	Display, SW PCB w/Component	RTL
47	YEFX0013010	Prism Mirror	
48	YEFC028334	Pannel Ass'y	
49	YEFE139082	Button, VOLUME	
50	YEFE139083	Button, OPEN	
51	YEFX0053005	Spring	
52	YEFE139081	Button, NAVI/DISP/MODE/ASP	
53	YEFX0052572	Moving Plate	
54	YEP0PT9432A0	Main PCB w/Component	RTL
55	YEFV03907	Magnetic Shield, Upper	
56	YEFL02731	Spacer	
57	YEFX9995271	Pad	
58	YEFX9995089	Pad	
59	YEFV03909	Magnetic Shield, CN701	
60	YEFX0217051	Bracket, CN201, CN403	
61	YEFV03908	Magnetic Shield, Buttom	
65	YEFX9992873	Pad, IC701, IC901	
66	YEFA05953	Chassis, Bottom	
67	YEFA131927	Connector Cover	
68	YEFX0217075	Bracket, SD Module	
69	YEFX9995223	Pad, SD Module	

Ref. No.	Part No.	Part Name & Description	Remarks
81	XSS5+6FX	Binding Screw, M5*6	
82	XTN2+8GFZ	Tapping Screw, M2*8	
83	YEJS03020	Binding Screw	
84	YEJS05043	Screw w/Washer	
85	YEJS06024	Binding Screw	
86	YEJS06262	Binding Screw	
87	YEJS06316	Binding Screw	
88	YEJS06342	Binding Screw	
89	YEJS06405	Binding Screw	
90	XQN2+BF3FX	Machine Screw, M2*3	
91	YEJS06266	Binding Screw	
92	YEJT03133	Tapping Screw	
93	XTT5+16AFZ	Tapping Screw, M5*16	
94	YEJT03180	Tapping Screw	
95	YEJT03156	Tapping Screw	
96	YEJT03340	Tapping Screw	
97	XQN2+C2FX	Binding Screw, M2*2	
98	XSB5+8FX	Binding Screw, M5*8	
99	XTB2+6GFX	Screw, M2*6	
100	XTB2+8GFZ	Tapping Screw, M2*8	
101	YEJT02039	Tapping Screw	
102	XYN2+C4FZ	Screw w/Washer, M2*4	

13. EXPLODED VIEW [Display Unit]

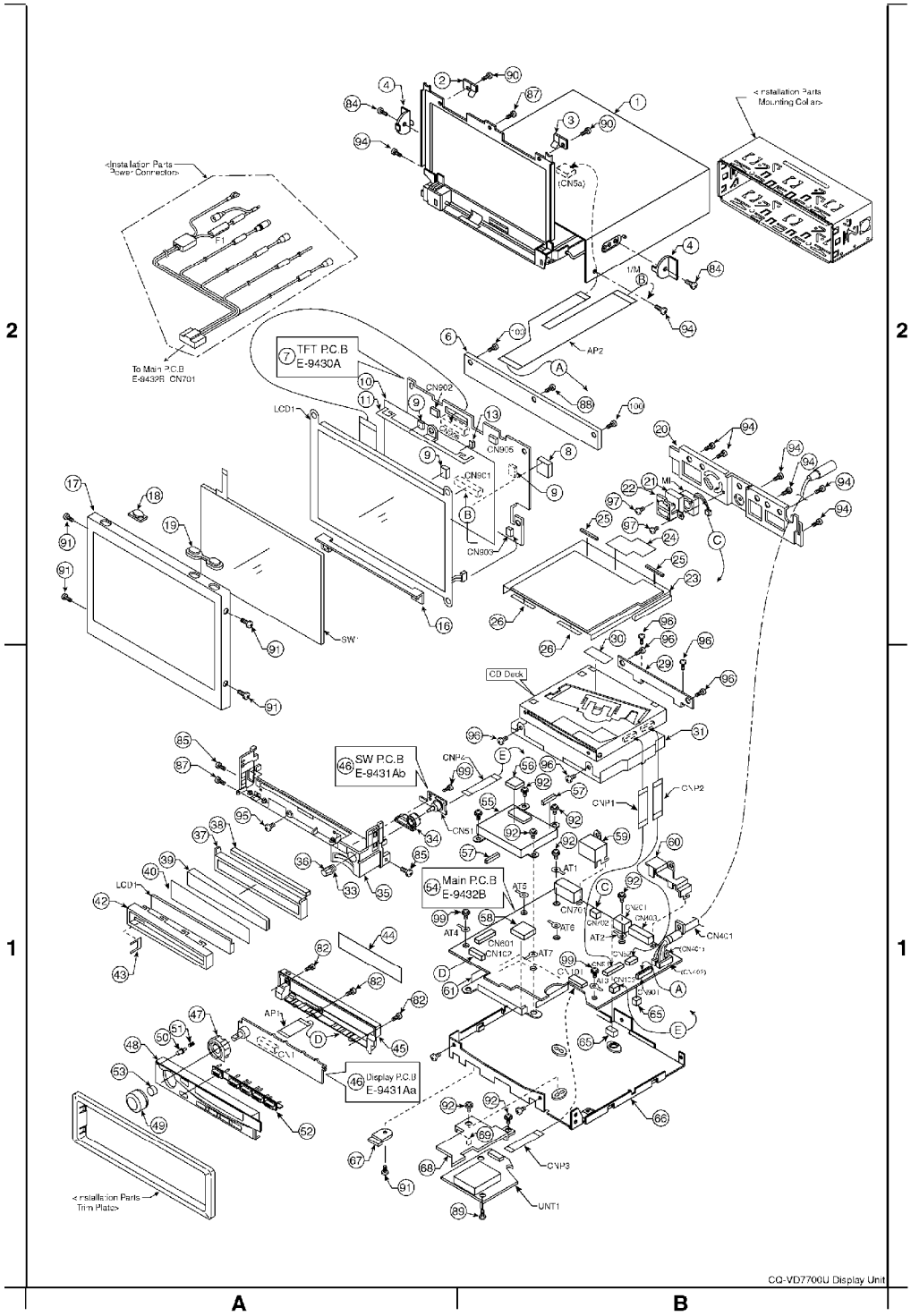

14. REPLACEMENT PARTS LIST [Hide-away Unit]

Notes :

1. Be sure to make your orders of replacement parts according to this list.

2. Important safety notice: Components, identified by ⚠ mark have

special characteristics important for safety. When replacing any of these components, use only manufacturer's specified parts.

3. Location keys in the remarks column indicates the general location of the parts shown in the exploded drawing, as in a road map.
4. The marking (RTL) indicates that Retention Time is limited for this item. After the discontinuation of assembly in production, the item will continue to be available for a specific period of time. The retention period of availability is dependent on the type of assembly, and in accordance with the laws governing part and product retention. After the end of this period, the assembly will no longer be available.

   - Order intake period is basically six months after the first shipment.

Ref. No.	Part No.	Part Name & Description	Remarks
[E6995B] RADIO Block			
IC's AND TRANSISTORs			
IC51	C1BB00000644	IC	
IC201	YEAMPC4570T1	IC	
IC202	YEAMPC4570T1	IC	
IC203	C0ABCB000032	IC	
IC204	C0ABCB000032	IC	
IC205	C1BB00000650	IC	
IC210	YEAMT4W66FUL	IC	
IC301	YEAMPC4570T1	IC	
IC302	C0ABCB000032	IC	
IC303	YEAMPC4570T1	IC	
IC304	C0JBAR000336	IC	
IC305	C1BB00000650	IC	
IC306	C1BB00000650	IC	
IC307	YEAMPC4570T1	IC	
IC309	C0ZBZ0000770	IC	
IC310	YEAMT4W66FUL	IC	
IC601	C2DBKJ000209	IC	
IC602	C3GBCC000001	IC	
IC603	C1EB00000072	IC	
IC604	C0JBAZ001166	IC	
IC605	YEAMC14584BE	IC	
IC606	AN8065SE1	IC	
IC607	C0FBBD000065	IC	
IC702	YEAMPC2905E1	IC	
IC703	C0DBEKG00001	IC	
PA51	J3CCBB000003	Electronic Tuner	
Q51	YEANFP1F3PT1	Transistor	
Q52	B1GDCFJJ0002	Transistor	

Ref. No.	Part No.	Part Name & Description	Remarks
Q53	B1GBCFNN0004	Transistor	
Q54	B1BBAC000007	Transistor	
Q55	YEAN2SK536TB	Transistor	
Q56	YEAND1899ZE1	Transistor	
Q207	XN0F26100L	Transistor	
Q208	XN0F26100L	Transistor	
Q209	YEANC4081STX	Transistor	
Q309	YEANC4081STX	Transistor	
Q601	B1GBCFNN0004	Transistor	
Q602	B1GBCFJJ0007	Transistor	
Q603	YEANA114TK	Transistor	
Q604	YEANA114TK	Transistor	
Q605	B1GDCFLL0010	Transistor	
Q606	B1GDCFLL0010	Transistor	
Q607	YEANA114TK	Transistor	
Q608	YEANA114TK	Transistor	
Q609	B1GDCFLL0010	Transistor	
Q610	B1GDCFLL0010	Transistor	
Q612	YEANA114TK	Transistor	
Q613	B1GDCFLL0010	Transistor	
Q615	B1GDCFLL0010	Transistor	
Q616	B1GDCFNN0002	Transistor	
Q703	YEAND1899ZE1	Transistor	
Q714	B1GBCFJJ0002	Transistor	
Q715	YEANHQ1F3PT1	Transistor	
DIODEs			
D51	YEADRD91M2T1	Diode	
D52	MA721TX	Diode	
D53	YEADRD91M1T2	Diode	
D204	MA8056LMHTX	Diode	
D205	B0ADCJ000020	Diode	
D206	B0ACCK000005	Diode	
D305	B0ADCJ000020	Diode	
D306	B0ACCK000005	Diode	
D601	B0ADCJ000007	Diode	
D602	B0ADCJ000007	Diode	
D702	B0ACCK000005	Diode	
D703	YEADEC10DS1	Diode	
D704	YEADEC10DS1	Diode	
D705	B0ACCK000005	Diode	
D706	YEADRD56M3T1	Diode	
D709	MA736TX	Diode	
CAPACITORs			
C52	YECUS1H470JC	Ceramic, 47PF 50WV	
C53	F1J1H103A513	Ceramic, 0.01 μ F 50WV	
C54	YECUZ1H103KX	Ceramic, 0.01 μ F 50WV	
C55	F1J1H103A513	Ceramic, 0.01 μ F 50WV	
C56	ECA1CM221I	Electrolytic, 220 μ F 16WV	

Ref. No.	Part No.	Part Name & Description	Remarks
C59	YECUS1C104KX	Ceramic, 0.1 μ F 16WV	
C60	ECA0JM221I	Electrolytic, 220 μ F 6.3WV	
C61	F1H1H101A020	Ceramic, 100PF 50WV	
C62	YECUS1H150JC	Ceramic, 15PF 50WV	
C63	YECUS1H150JC	Ceramic, 15PF 50WV	
C64	ECA1CM100I	Electrolytic, 10 μ F 16WV	
C65	ECA1CM101I	Electrolytic, 100 μ F 16WV	
C66	YECUZ1H103KX	Ceramic, 0.01 μ F 50WV	
C67	ECSH1VY224CR	Electrolytic, 0.22 μ F 35WV	
C68	F1H1H2230003	Ceramic, 0.022 μ F 50WV	
C69	ECA1CM221I	Electrolytic, 220 μ F 16WV	
C70	ECA1CM221I	Electrolytic, 220 μ F 16WV	
C71	ECA1CM101I	Electrolytic, 100 μ F 16WV	
C72	YECUZ1C104KX	Ceramic, 0.1 μ F 16WV	
C73	ECA1AM101I	Electrolytic, 100 μ F 10WV	
C74	ECA1CM101I	Electrolytic, 100 μ F 16WV	
C200	YECUS1E223KX	Ceramic, 0.022 μ F 25WV	
C202	ECEV1CA100SR	Electrolytic, 10 μ F 16WV	
C203	F1H1H100A226	Ceramic, 10PF 50WV	
C204	ECEV1CA100SR	Electrolytic, 10 μ F 16WV	
C205	F1H1H100A226	Ceramic, 10PF 50WV	
C206	ECEV1CA100SR	Electrolytic, 10 μ F 16WV	
C207	F1H1H100A226	Ceramic, 10PF 50WV	
C208	ECEV1CA100SR	Electrolytic, 10 μ F 16WV	
C209	F1H1H100A226	Ceramic, 10PF 50WV	
C210	YECUZ1H332KX	Ceramic, 3300PF 50WV	
C211	YECUZ1H102KX	Ceramic, 1000PF 50WV	
C212	YECUZ1H331JC	Ceramic, 330PF 50WV	
C215	YECUZ1H332KX	Ceramic, 3300PF 50WV	
C216	YECUZ1H102KX	Ceramic, 1000PF 50WV	
C217	YECUZ1H331JC	Ceramic, 330PF 50WV	
C221	ECEV1CA100SR	Electrolytic, 10 μ F 16WV	
C222	F1H1H100A226	Ceramic, 10PF 50WV	
C223	ECEV1CA100SR	Electrolytic, 10 μ F 16WV	
C224	F1H1H100A226	Ceramic, 10PF 50WV	
C225	YECUZ1H332KX	Ceramic, 3300PF 50WV	
C226	F1H1H333A783	Ceramic, 0.033 μ F 50WV	
C227	F1H1E1530004	Ceramic, 0.015 μ F 25WV	
C230	ECEV1CA100SR	Electrolytic, 10 μ F 16WV	
C231	ECEV1CA100SR	Electrolytic, 10 μ F 16WV	
C232	F2J1H6R80001	Electrolytic, 6.8 μ F 50WV	
C233	F2J1H6R80001	Electrolytic, 6.8 μ F 50WV	
C234	ECA1CM101I	Electrolytic, 100 μ F 16WV	
C235	F1H1H152A021	Ceramic, 1500PF 50WV	

Ref. No.	Part No.	Part Name & Description	Remarks
C236	ECEV1CA100SR	Electrolytic, 10 μ F 16WV	
C237	ECA1CM470I	Electrolytic, 47 μ F 16WV	
C238	ECA1CM101I	Electrolytic, 100 μ F 16WV	
C239	F1H1H152A021	Ceramic, 1500PF 50WV	
C240	F2J1H6R80001	Electrolytic, 6.8 μ F 50WV	
C241	F1J1H221A665	Ceramic, 220PF 50WV	
C242	F1J1H221A665	Ceramic, 220PF 50WV	
C243	F1J1H221A665	Ceramic, 220PF 50WV	
C244	ECEV1HA2R2R	Electrolytic, 2.2 μ F 50WV	
C245	ECEV1HA2R2R	Electrolytic, 2.2 μ F 50WV	
C254	ECA1CM470I	Electrolytic, 47 μ F 16WV	
C255	ECA1CM101I	Electrolytic, 100 μ F 16WV	
C256	F1H1H152A021	Ceramic, 1500PF 50WV	
C257	YECUS1C104KX	Ceramic, 0.1 μ F 16WV	
C258	ECA1CM470I	Electrolytic, 47 μ F 16WV	
C272	F1H0J105A001	Ceramic, 1 μ F 6.3WV	
C273	F1H0J105A001	Ceramic, 1 μ F 6.3WV	
C274	F1H1H101A020	Ceramic, 100PF 50WV	
C275	F1H1H101A020	Ceramic, 100PF 50WV	
C276	ECA1CM100I	Electrolytic, 10 μ F 16WV	
C277	F1H0J105A001	Ceramic, 1 μ F 6.3WV	
C278	YECUZ1C104KX	Ceramic, 0.1 μ F 16WV	
C279	ECA1CM470I	Electrolytic, 47 μ F 16WV	
C280	YECUZ1C104KX	Ceramic, 0.1 μ F 16WV	
C287	YECUS1C104KX	Ceramic, 0.1 μ F 16WV	
C288	ECA1CM101I	Electrolytic, 100 μ F 16WV	
C289	YECUS1C104KX	Ceramic, 0.1 μ F 16WV	
C290	ECA1CM101I	Electrolytic, 100 μ F 16WV	
C291	YECUS1C104KX	Ceramic, 0.1 μ F 16WV	
C292	ECA1CM101I	Electrolytic, 100 μ F 16WV	
C293	YECUS1C104KX	Ceramic, 0.1 μ F 16WV	
C294	ECA1CM101I	Electrolytic, 100 μ F 16WV	
C297	YECUS1C104KX	Ceramic, 0.1 μ F 16WV	
C298	YECUS1C104KX	Ceramic, 0.1 μ F 16WV	
C299	ECA1AM221I	Electrolytic, 220 μ F 10WV	
C300	YECUS1E223KX	Ceramic, 0.022 μ F 25WV	
C302	ECEV1CA100SR	Electrolytic, 10 μ F 16WV	
C303	F1H1H100A226	Ceramic, 10PF 50WV	
C304	ECEV1CA100SR	Electrolytic, 10 μ F 16WV	
C305	F1H1H100A226	Ceramic, 10PF 50WV	
C306	ECEV1CA100SR	Electrolytic, 10 μ F 16WV	
C307	F1H1H100A226	Ceramic, 10PF 50WV	

Ref. No.	Part No.	Part Name & Description	Remarks
C308	ECEV1CA100SR	Electrolytic, 10 μ F 16WV	
C309	F1H1H100A226	Ceramic, 10PF 50WV	
C310	YECUZ1H332KX	Ceramic, 3300PF 50WV	
C311	YECUZ1H102KX	Ceramic, 1000PF 50WV	
C312	YECUZ1H331JC	Ceramic, 330PF 50WV	
C315	YECUZ1H332KX	Ceramic, 3300PF 50WV	
C316	YECUZ1H102KX	Ceramic, 1000PF 50WV	
C317	YECUZ1H331JC	Ceramic, 330PF 50WV	
C321	ECEV1CA100SR	Electrolytic, 10 μ F 16WV	
C322	F1H1H100A226	Ceramic, 10PF 50WV	
C323	ECEV1CA100SR	Electrolytic, 10 μ F 16WV	
C324	F1H1H100A226	Ceramic, 10PF 50WV	
C325	YECUZ1H332KX	Ceramic, 3300PF 50WV	
C326	YECUZ1H102KX	Ceramic, 1000PF 50WV	
C327	YECUZ1H331JC	Ceramic, 330PF 50WV	
C330	ECEV1CA100SR	Electrolytic, 10 μ F 16WV	
C331	ECEV1CA100SR	Electrolytic, 10 μ F 16WV	
C332	F2J1H6R80001	Electrolytic, 6.8 μ F 50WV	
C333	F2J1H6R80001	Electrolytic, 6.8 μ F 50WV	
C334	ECA1CM101I	Electrolytic, 100 μ F 16WV	
C335	F1H1H152A021	Ceramic, 1500PF 50WV	
C336	ECEV1CA100SR	Electrolytic, 10 μ F 16WV	
C337	ECA1CM470I	Electrolytic, 47 μ F 16WV	
C338	ECA1CM101I	Electrolytic, 100 μ F 16WV	
C339	F1H1H152A021	Ceramic, 1500PF 50WV	
C340	F2J1H6R80001	Electrolytic, 6.8 μ F 50WV	
C341	F1J1H221A665	Ceramic, 220PF 50WV	
C342	F1J1H221A665	Ceramic, 220PF 50WV	
C343	F1J1H221A665	Ceramic, 220PF 50WV	
C344	ECEV1HA2R2R	Electrolytic, 2.2 μ F 50WV	
C345	ECEV1HA2R2R	Electrolytic, 2.2 μ F 50WV	
C354	ECA1CM470I	Electrolytic, 47 μ F 16WV	
C355	ECA1CM101I	Electrolytic, 100 μ F 16WV	
C356	F1H1H152A021	Ceramic, 1500PF 50WV	
C357	YECUS1C104KX	Ceramic, 0.1 μ F 16WV	
C371	ECA1AM221I	Electrolytic, 220 μ F 10WV	
C372	ECA1CM100I	Electrolytic, 10 μ F 16WV	
C373	YECUS1C104KX	Ceramic, 0.1 μ F 16WV	
C374	YECUZ1C104KX	Ceramic, 0.1 μ F 16WV	
C380	YECUZ1C104KX	Ceramic, 0.1 μ F 16WV	
C381	F1H0J105A001	Ceramic, 1 μ F 6.3WV	
C382	F1H0J105A001	Ceramic, 1 μ F 6.3WV	
C383	F1H1H101A020	Ceramic, 100PF 50WV	
C384	F1H1H101A020	Ceramic, 100PF 50WV	

Ref. No.	Part No.	Part Name & Description	Remarks
C385	ECA1CM470I	Electrolytic, 47 μ F 16WV	
C388	YECUS1C104KX	Ceramic, 0.1 μ F 16WV	
C389	ECA1CM101I	Electrolytic, 100 μ F 16WV	
C390	YECUS1C104KX	Ceramic, 0.1 μ F 16WV	
C391	ECA1CM101I	Electrolytic, 100 μ F 16WV	
C392	ECA1CM100I	Electrolytic, 10 μ F 16WV	
C393	YECUS1C104KX	Ceramic, 0.1 μ F 16WV	
C394	ECA1CM101I	Electrolytic, 100 μ F 16WV	
C395	YECUS1C104KX	Ceramic, 0.1 μ F 16WV	
C396	YECUS1C104KX	Ceramic, 0.1 μ F 16WV	
C397	ECA1CM101I	Electrolytic, 100 μ F 16WV	
C601	ECA0JM221I	Electrolytic, 220 μ F 6.3WV	
C602	YECUS1C104KX	Ceramic, 0.1 μ F 16WV	
C603	YECUZ1C104KX	Ceramic, 0.1 μ F 16WV	
C604	F1J1C1050013	Ceramic, 1 μ F 16WV	
C605	F1H1H150A020	Ceramic, 15PF 50WV	
C606	F1H1H150A020	Ceramic, 15PF 50WV	
C607	ECA0JM221I	Electrolytic, 220 μ F 6.3WV	
C608	YECUS1C104KX	Ceramic, 0.1 μ F 16WV	
C609	YECUS1C104KX	Ceramic, 0.1 μ F 16WV	
C610	YECUS1C104KX	Ceramic, 0.1 μ F 16WV	
C611	YECUZ1H103KX	Ceramic, 0.01 μ F 50WV	
C612	ECA0JM221I	Electrolytic, 220 μ F 6.3WV	
C613	YECUS1C104KX	Ceramic, 0.1 μ F 16WV	
C614	F1H1H101A020	Ceramic, 100PF 50WV	
C615	F1H1H101A020	Ceramic, 100PF 50WV	
C616	ECA1CM100I	Electrolytic, 10 μ F 16WV	
C617	YECUZ1C104KX	Ceramic, 0.1 μ F 16WV	
C618	YECUZ1C104KX	Ceramic, 0.1 μ F 16WV	
C619	YECUZ1C104KX	Ceramic, 0.1 μ F 16WV	
C620	ECA1CM100I	Electrolytic, 10 μ F 16WV	
C621	YECUS1C104KX	Ceramic, 0.1 μ F 16WV	
C622	YECUZ1C104KX	Ceramic, 0.1 μ F 16WV	
C623	YECUZ1C104KX	Ceramic, 0.1 μ F 16WV	
C624	ECA1CM220I	Electrolytic, 22 μ F 16WV	
C625	ECA1CM220I	Electrolytic, 22 μ F 16WV	
C626	ECA1CM220I	Electrolytic, 22 μ F 16WV	
C627	ECA1CM220I	Electrolytic, 22 μ F 16WV	
C629	ECA1CM220I	Electrolytic, 22 μ F 16WV	
C630	F1H0J105A001	Ceramic, 1 μ F 6.3WV	

Ref. No.	Part No.	Part Name & Description	Remarks
C631	F1H1H123A783	Ceramic, 0.012 μF 50WV	
C638	F1J1H472A675	Ceramic, 4700PF 50WV	
C703	ECA1CM331B	Electrolytic, 330 μF 16WV	
C704	ECA1CM100I	Electrolytic, 10 μF 16WV	
C705	YECUS1C104KX	Ceramic, 0.1 μF 16WV	
C707	ECA0JM331I	Electrolytic, 330 μF 6.3WV	
C708	F4D554730004	Electrolytic, 0.047 μF 5.5WV	
C709	ECA1CM101I	Electrolytic, 100 μF 16WV	
C710	F1J1H103A513	Ceramic, 0.01 μF 50WV	
C711	YECUS1C474KX	Ceramic, 0.47 μF 16WV	
C712	YECUS1C474KX	Ceramic, 0.47 μF 16WV	
C729	ECA1CM101I	Electrolytic, 100 μF 16WV	
C730	YECUZ1C104KX	Ceramic, 0.1 μF 16WV	
C731	YECUZ1C104KX	Ceramic, 0.1 μF 16WV	
C732	ECA0JM101I	Electrolytic, 100 μF 6.3WV	
C739	ECA1CM471B	Electrolytic, 470 μF 16WV	
C740	ECA1CM471B	Electrolytic, 470 μF 16WV	
C741	ECA1CM100I	Electrolytic, 10 μF 16WV	
C742	YECUZ1C104KX	Ceramic, 0.1 μF 16WV	
C743	YECUS1C104KX	Ceramic, 0.1 μF 16WV	
C744	ECSH1VX105CR	Electrolytic, 1 μF 35WV	
C745	EEUFC1E221B	Electrolytic, 220 μF 25WV	
C746	ECA1AM221I	Electrolytic, 220 μF 10WV	
C747	YECUS1C104KX	Ceramic, 0.1 μF 16WV	
C748	YECUS1C104KX	Ceramic, 0.1 μF 16WV	
C749	ECA1CM101I	Electrolytic, 100 μF 16WV	
RESISTORs			
C213	ERJ6GEY0R00V	Chip, 0 Ω 1/10W	
C218	ERJ6GEY0R00V	Chip, 0 Ω 1/10W	
C228	ERJ6GEY0R00V	Chip, 0 Ω 1/10W	
C313	ERJ6GEY0R00V	Chip, 0 Ω 1/10W	
C318	ERJ6GEY0R00V	Chip, 0 Ω 1/10W	
C328	ERJ6GEY0R00V	Chip, 0 Ω 1/10W	
FB207	ERJ6GEY0R00V	Chip, 0 Ω 1/10W	
FB208	ERJ6GEY0R00V	Chip, 0 Ω 1/10W	
FB209	ERJ6GEY0R00V	Chip, 0 Ω 1/10W	
FB210	ERJ6GEY0R00V	Chip, 0 Ω 1/10W	
FB307	ERJ6GEY0R00V	Chip, 0 Ω 1/10W	
FB308	ERJ6GEY0R00V	Chip, 0 Ω 1/10W	
FB309	ERJ6GEY0R00V	Chip, 0 Ω 1/10W	

Ref. No.	Part No.	Part Name & Description	Remarks
FB310	ERJ6GEY0R00V	Chip, 0 Ω 1/10W	
R51	ERJ6GEYJ5R6V	Chip, 5.6 Ω 1/10W	
R52	ERJ6GEYJ101	Chip, 100 Ω 1/10W	
R53	ERJ3GEYJ331V	Chip, 330 Ω 1/16W	
R54	ERJ6GEY0R00V	Chip, 0 Ω 1/10W	
R55	ERJ6GEY0R00V	Chip, 0 Ω 1/10W	
R56	ERJ3GEYJ152V	Chip, 1.5k Ω 1/16W	
R57	ERJ3GEYJ473V	Chip, 47k Ω 1/16W	
R58	ERJ3GEYJ222V	Chip, 2.2k Ω 1/16W	
R59	ERJ3GEYJ473V	Chip, 47k Ω 1/16W	
R60	ERJ6GEYJ102	Chip, 1k Ω 1/10W	
R61	ERJ6GEYJ100	Chip, 10 Ω 1/10W	
R62	ERJ6GEYJ182	Chip, 1.8k Ω 1/10W	
R63	ERJ6GEYJ561	Chip, 560 Ω 1/10W	
R64	ERJ8GEYJ1R0V	Chip, 1 Ω 1/8W	
R65	ERJ6GEYJ102	Chip, 1k Ω 1/10W	
R200	ERJ6GEY0R00V	Chip, 0 Ω 1/10W	
R202	ERJ3GEYJ363V	Chip, 36k Ω 1/16W	
R203	ERJ3GEYJ393V	Chip, 39k Ω 1/16W	
R204	ERJ3GEYJ363V	Chip, 36k Ω 1/16W	
R205	ERJ3GEYJ393V	Chip, 39k Ω 1/16W	
R206	ERJ3GEYJ363V	Chip, 36k Ω 1/16W	
R207	ERJ3GEYJ393V	Chip, 39k Ω 1/16W	
R208	ERJ3GEYJ363V	Chip, 36k Ω 1/16W	
R209	ERJ3GEYJ393V	Chip, 39k Ω 1/16W	
R210	ERJ3GEYJ221V	Chip, 220 Ω 1/16W	
R211	ERJ3GEYJ472V	Chip, 4.7k Ω 1/16W	
R212	ERJ3GEYJ472V	Chip, 4.7k Ω 1/16W	
R215	ERJ3GEY0R00V	Chip, 0 Ω 1/16W	
R216	ERJ3GEYJ221V	Chip, 220 Ω 1/16W	
R217	ERJ3GEYJ472V	Chip, 4.7k Ω 1/16W	
R218	ERJ3GEYJ472V	Chip, 4.7k Ω 1/16W	
R221	ERJ3GEY0R00V	Chip, 0 Ω 1/16W	
R222	ERJ3GEY0R00V	Chip, 0 Ω 1/16W	
R223	ERJ3GEYJ363V	Chip, 36k Ω 1/16W	
R224	ERJ3GEYJ393V	Chip, 39k Ω 1/16W	
R225	ERJ3GEYJ363V	Chip, 36k Ω 1/16W	
R226	ERJ3GEYJ393V	Chip, 39k Ω 1/16W	
R227	ERJ3GEYJ221V	Chip, 220 Ω 1/16W	
R228	ERJ3GEYJ333V	Chip, 33k Ω 1/16W	
R229	ERJ3GEYJ333V	Chip, 33k Ω 1/16W	
R232	ERJ3GEY0R00V	Chip, 0 Ω 1/16W	
R233	ERJ3GEYJ243V	Chip, 24k Ω 1/16W	
R234	ERJ6GEYJ393	Chip, 39k Ω 1/10W	
R235	ERJ6GEYJ393	Chip, 39k Ω 1/10W	

Ref. No.	Part No.	Part Name & Description	Remarks
R236	ERJ3GEYJ243V	Chip, 24k Ω 1/16W	
R237	ERJ3GEYJ243V	Chip, 24k Ω 1/16W	
R238	ERJ6GEYJ393	Chip, 39k Ω 1/10W	
R239	ERJ6GEYJ560	Chip, 56 Ω 1/10W	
R240	ERJ6GEYJ103	Chip, 10k Ω 1/10W	
R241	ERJ6GEYJ560	Chip, 56 Ω 1/10W	
R242	ERJ6GEYJ103	Chip, 10k Ω 1/10W	
R243	ERJ6GEYJ560	Chip, 56 Ω 1/10W	
R244	ERJ6GEYJ223	Chip, 22k Ω 1/10W	
R245	ERJ6GEY0R00V	Chip, 0 Ω 1/10W	
R246	ERJ6GEY0R00V	Chip, 0 Ω 1/10W	
R247	ERJ6GEYJ104	Chip, 100k Ω 1/10W	
R248	ERJ6GEYJ104	Chip, 100k Ω 1/10W	
R249	ERJ6GEYJ104	Chip, 100k Ω 1/10W	
R250	ERJ6GEYJ104	Chip, 100k Ω 1/10W	
R251	ERJ3GEY0R00V	Chip, 0 Ω 1/16W	
R252	ERJ3GEY0R00V	Chip, 0 Ω 1/16W	
R253	ERJ3GEY0R00V	Chip, 0 Ω 1/16W	
R254	ERJ3GEY0R00V	Chip, 0 Ω 1/16W	
R255	ERJ3GEY0R00V	Chip, 0 Ω 1/16W	
R260	ERJ3GEY0R00V	Chip, 0 Ω 1/16W	
R261	ERJ3GEY0R00V	Chip, 0 Ω 1/16W	
R263	ERJ6GEYJ222	Chip, 2.2k Ω 1/10W	
R273	ERJ3GEY0R00V	Chip, 0 Ω 1/16W	
R275	ERJ3GEYJ473V	Chip, 47k Ω 1/16W	
R276	ERJ3GEYJ473V	Chip, 47k Ω 1/16W	
R277	ERJ3GEYJ223V	Chip, 22k Ω 1/16W	
R278	ERJ3GEYJ473V	Chip, 47k Ω 1/16W	
R279	ERJ3GEYJ681V	Chip, 680 Ω 1/16W	
R292	ERJ6GEYJ103	Chip, 10k Ω 1/10W	
R293	ERJ6GEYJ103	Chip, 10k Ω 1/10W	
R300	ERJ6GEY0R00V	Chip, 0 Ω 1/10W	
R302	ERJ3GEYJ363V	Chip, 36k Ω 1/16W	
R303	ERJ3GEYJ393V	Chip, 39k Ω 1/16W	
R304	ERJ3GEYJ363V	Chip, 36k Ω 1/16W	
R305	ERJ3GEYJ393V	Chip, 39k Ω 1/16W	
R306	ERJ3GEYJ363V	Chip, 36k Ω 1/16W	
R307	ERJ3GEYJ393V	Chip, 39k Ω 1/16W	
R308	ERJ3GEYJ363V	Chip, 36k Ω 1/16W	
R309	ERJ3GEYJ393V	Chip, 39k Ω 1/16W	
R310	ERJ3GEYJ221V	Chip, 220 Ω 1/16W	
R311	ERJ3GEYJ472V	Chip, 4.7k Ω 1/16W	
R312	ERJ3GEYJ472V	Chip, 4.7k Ω 1/16W	
R315	ERJ3GEY0R00V	Chip, 0 Ω 1/16W	
R316	ERJ3GEYJ221V	Chip, 220 Ω 1/16W	

Ref. No.	Part No.	Part Name & Description	Remarks
R317	ERJ3GEYJ472V	Chip, 4.7k Ω 1/16W	
R318	ERJ3GEYJ472V	Chip, 4.7k Ω 1/16W	
R321	ERJ3GEY0R00V	Chip, 0 Ω 1/16W	
R322	ERJ3GEY0R00V	Chip, 0 Ω 1/16W	
R323	ERJ3GEYJ363V	Chip, 36k Ω 1/16W	
R324	ERJ3GEYJ393V	Chip, 39k Ω 1/16W	
R325	ERJ3GEYJ363V	Chip, 36k Ω 1/16W	
R326	ERJ3GEYJ393V	Chip, 39k Ω 1/16W	
R327	ERJ3GEYJ221V	Chip, 220 Ω 1/16W	
R328	ERJ3GEYJ472V	Chip, 4.7k Ω 1/16W	
R329	ERJ3GEYJ472V	Chip, 4.7k Ω 1/16W	
R332	ERJ3GEY0R00V	Chip, 0 Ω 1/16W	
R333	ERJ3GEYJ243V	Chip, 24k Ω 1/16W	
R334	ERJ6GEYJ393	Chip, 39k Ω 1/10W	
R335	ERJ6GEYJ393	Chip, 39k Ω 1/10W	
R336	ERJ3GEYJ243V	Chip, 24k Ω 1/16W	
R337	ERJ3GEYJ243V	Chip, 24k Ω 1/16W	
R338	ERJ6GEYJ393	Chip, 39k Ω 1/10W	
R339	ERJ6GEYJ560	Chip, 56 Ω 1/10W	
R340	ERJ6GEYJ103	Chip, 10k Ω 1/10W	
R341	ERJ6GEYJ560	Chip, 56 Ω 1/10W	
R342	ERJ6GEYJ103	Chip, 10k Ω 1/10W	
R343	ERJ6GEYJ560	Chip, 56 Ω 1/10W	
R344	ERJ6GEYJ223	Chip, 22k Ω 1/10W	
R345	ERJ6GEY0R00V	Chip, 0 Ω 1/10W	
R346	ERJ6GEY0R00V	Chip, 0 Ω 1/10W	
R347	ERJ6GEYJ104	Chip, 100k Ω 1/10W	
R348	ERJ6GEYJ104	Chip, 100k Ω 1/10W	
R349	ERJ6GEYJ104	Chip, 100k Ω 1/10W	
R350	ERJ6GEYJ104	Chip, 100k Ω 1/10W	
R351	ERJ3GEY0R00V	Chip, 0 Ω 1/16W	
R352	ERJ3GEY0R00V	Chip, 0 Ω 1/16W	
R353	ERJ3GEY0R00V	Chip, 0 Ω 1/16W	
R354	ERJ3GEY0R00V	Chip, 0 Ω 1/16W	
R355	ERJ3GEY0R00V	Chip, 0 Ω 1/16W	
R360	ERJ3GEY0R00V	Chip, 0 Ω 1/16W	
R361	ERJ3GEY0R00V	Chip, 0 Ω 1/16W	
R363	ERJ6GEYJ222	Chip, 2.2k Ω 1/10W	
R373	ERJ3GEYJ103V	Chip, 10k Ω 1/16W	
R374	ERJ3GEYJ103V	Chip, 10k Ω 1/16W	
R381	ERJ3GEYJ223V	Chip, 22k Ω 1/16W	
R382	ERJ3GEYJ473V	Chip, 47k Ω 1/16W	
R383	ERJ3GEYJ473V	Chip, 47k Ω 1/16W	
R384	ERJ3GEYJ473V	Chip, 47k Ω 1/16W	
R389	ERJ3GEYJ103V	Chip, 10k Ω 1/16W	

Ref. No.	Part No.	Part Name & Description	Remarks
R390	ERJ3GEYJ103V	Chip, 10k Ω 1/16W	
R392	ERJ6GEYJ103	Chip, 10k Ω 1/10W	
R393	ERJ6GEYJ103	Chip, 10k Ω 1/10W	
R601	ERJ3GEYJ102V	Chip, 1k Ω 1/16W	
R602	ERJ6GEYJ102	Chip, 1k Ω 1/10W	
R603	ERJ6GEYJ102	Chip, 1k Ω 1/10W	
R604	ERJ6GEYJ102	Chip, 1k Ω 1/10W	
R605	ERJ3GEY0R00V	Chip, 0 Ω 1/16W	
R607	ERJ6GEYJ102	Chip, 1k Ω 1/10W	
R608	ERJ3GEYJ102V	Chip, 1k Ω 1/16W	
R609	ERJ3GEYJ102V	Chip, 1k Ω 1/16W	
R610	ERJ3GEYJ102V	Chip, 1k Ω 1/16W	
R611	ERJ3GEYJ102V	Chip, 1k Ω 1/16W	
R612	ERJ3GEYJ102V	Chip, 1k Ω 1/16W	
R613	ERJ3GEYJ102V	Chip, 1k Ω 1/16W	
R614	ERJ3GEYJ102V	Chip, 1k Ω 1/16W	
R615	ERJ3GEYJ102V	Chip, 1k Ω 1/16W	
R616	ERJ3GEYJ102V	Chip, 1k Ω 1/16W	
R617	ERJ3GEYJ102V	Chip, 1k Ω 1/16W	
R619	ERJ3GEYJ102V	Chip, 1k Ω 1/16W	
R620	ERJ3GEYJ104V	Chip, 100k Ω 1/16W	
R621	ERJ3GEYJ333V	Chip, 33k Ω 1/16W	
R622	ERJ3GEYJ822V	Chip, 8.2k Ω 1/16W	
R623	ERJ3GEYJ102V	Chip, 1k Ω 1/16W	
R624	ERJ3GEYJ102V	Chip, 1k Ω 1/16W	
R625	ERJ3GEYJ102V	Chip, 1k Ω 1/16W	
R627	ERJ3GEYJ102V	Chip, 1k Ω 1/16W	
R628	ERJ3GEYJ102V	Chip, 1k Ω 1/16W	
R629	ERJ3GEYJ221V	Chip, 220 Ω 1/16W	
R630	ERJ3GEYJ472V	Chip, 4.7k Ω 1/16W	
R631	ERJ3GEYJ102V	Chip, 1k Ω 1/16W	
R632	ERJ3GEYJ221V	Chip, 220 Ω 1/16W	
R633	ERJ3GEYJ472V	Chip, 4.7k Ω 1/16W	
R634	ERJ3GEYJ101V	Chip, 100 Ω 1/16W	
R635	ERJ3GEYJ101V	Chip, 100 Ω 1/16W	
R636	ERJ3GEYJ102V	Chip, 1k Ω 1/16W	
R637	ERJ3GEYJ102V	Chip, 1k Ω 1/16W	
R638	ERJ3GEYJ473V	Chip, 47k Ω 1/16W	
R639	ERJ6GEYJ473	Chip, 47k Ω 1/10W	
R640	ERJ8GEYJ680V	Chip, 68 Ω 1/8W	
R641	ERJ8GEYJ680V	Chip, 68 Ω 1/8W	
R642	ERJ3GEYJ101V	Chip, 100 Ω 1/16W	
R643	ERJ3GEYJ103V	Chip, 10k Ω 1/16W	
R644	ERJ6GEYJ104	Chip, 100k Ω 1/10W	
R645	ERJ6GEYJ103	Chip, 10k Ω 1/10W	

Ref. No.	Part No.	Part Name & Description	Remarks
R646	ERJ3GEYJ104V	Chip, 100k Ω 1/16W	
R647	ERJ3GEYJ104V	Chip, 100k Ω 1/16W	
R648	ERJ3GEYJ104V	Chip, 100k Ω 1/16W	
R649	ERJ6GEYJ102	Chip, 1k Ω 1/10W	
R650	ERJ6GEYJ102	Chip, 1k Ω 1/10W	
R651	ERJ6GEYJ102	Chip, 1k Ω 1/10W	
R652	ERJ6GEYJ102	Chip, 1k Ω 1/10W	
R653	ERJ6GEYJ102	Chip, 1k Ω 1/10W	
R654	ERJ3GEYJ473V	Chip, 47k Ω 1/16W	
R656	ERJ3GEYJ473V	Chip, 47k Ω 1/16W	
R662	ERJ3GEYJ102V	Chip, 1k Ω 1/16W	
R663	ERJ3GEYJ561V	Chip, 560 Ω 1/16W	
R664	ERJ3GEYJ103V	Chip, 10k Ω 1/16W	
R665	ERJ3GEYJ102V	Chip, 1k Ω 1/16W	
R666	ERJ3GEYJ103V	Chip, 10k Ω 1/16W	
R667	ERJ3GEYJ102V	Chip, 1k Ω 1/16W	
R668	ERJ3GEYJ103V	Chip, 10k Ω 1/16W	
R669	ERJ3GEYJ102V	Chip, 1k Ω 1/16W	
R670	ERJ3GEYJ103V	Chip, 10k Ω 1/16W	
R671	ERJ3GEYJ102V	Chip, 1k Ω 1/16W	
R673	ERJ3GEYJ102V	Chip, 1k Ω 1/16W	
R674	ERJ3GEYJ103V	Chip, 10k Ω 1/16W	
R676	ERJ3GEYJ221V	Chip, 220 Ω 1/16W	
R677	ERJ3GEYJ221V	Chip, 220 Ω 1/16W	
R678	ERJ3GEYJ103V	Chip, 10k Ω 1/16W	
R679	ERJ3GEYJ104V	Chip, 100k Ω 1/16W	
R680	ERJ3GEYJ221V	Chip, 220 Ω 1/16W	
R681	ERJ3GEYJ221V	Chip, 220 Ω 1/16W	
R682	ERJ6GEYJ102	Chip, 1k Ω 1/10W	
R683	ERJ6GEYJ472	Chip, 4.7k Ω 1/10W	
R690	ERJ3GEYJ103V	Chip, 10k Ω 1/16W	
R693	ERJ6GEYJ472	Chip, 4.7k Ω 1/10W	
R694	ERJ6GEYJ473	Chip, 47k Ω 1/10W	
R695	ERJ6GEYJ102	Chip, 1k Ω 1/10W	
R696	ERJ6GEYJ102	Chip, 1k Ω 1/10W	
R705	ERJ14YJ390H	Chip, 39 Ω 1/4W	
R706	ERJ6GEYJ103	Chip, 10k Ω 1/10W	
R707	ERJ6GEYJ102	Chip, 1k Ω 1/10W	
R708	ERJ6GEYJ154	Chip, 150k Ω 1/10W	
R709	ERJ6GEYJ273	Chip, 27k Ω 1/10W	
R710	ERJ6GEYJ274	Chip, 270k Ω 1/10W	
R711	ERJ6GEYJ393	Chip, 39k Ω 1/10W	
R722	ERJ12YJ150H	Chip, 15 Ω 1/2W	
R728	ERJ6ENF4701V	Chip, 4.7k Ω 1/10W	
R729	ERJ6ENF3901V	Chip, 3.9k Ω 1/10W	

Ref. No.	Part No.	Part Name & Description	Remarks
R730	ERJ6ENF1201V	Chip, 1.2k Ω 1/10W	
R731	ERJ6GEY0R00V	Chip, 0 Ω 1/10W	
R751	ERJ8GEY0R00V	Chip, 0 Ω 1/8W	
R753	ERJ8GEY0R00V	Chip, 0 Ω 1/8W	
R756	ERJ6GEY0R00V	Chip, 0 Ω 1/10W	
R757	ERJ6GEY0R00V	Chip, 0 Ω 1/10W	
R758	ERJ6GEY0R00V	Chip, 0 Ω 1/10W	
R759	ERJ6GEY0R00V	Chip, 0 Ω 1/10W	
R760	ERJ6GEY0R00V	Chip, 0 Ω 1/10W	
R761	ERJ6GEY0R00V	Chip, 0 Ω 1/10W	
R763	ERJ6GEY0R00V	Chip, 0 Ω 1/10W	
R764	ERJ8GEY0R00V	Chip, 0 Ω 1/8W	
CONNECTORs			
CN201	K2HA204B0069	Jack, 2P	
CN202	K2HA204B0069	Jack, 2P	
CN203	K2HA204B0071	Jack, 2P	
CN301	K2HA204B0069	Jack, 2P	
CN302	K1FA112B0014	Connector, 13P	
CN601	YEAE011462	Connector, 10P	
CN602	K1KB30B00015	Connector, 30P	
CN603	YEAE012795	Connector, 6P	
CN604	K1MN26B00015	Connector, 26P	
CN608	K1KA06A00008	Connector, 6P	
CN609	K1KA08A00096	Connector, 8P	
CN703	K1PA08D00002	Connector, 8P	
COILs			
C58	YELTBLM21P3S	Coil	
FB201	J0JHC0000026	Coil	
FB202	J0JHC0000026	Coil	
FB203	J0JHC0000026	Coil	
FB204	J0JHC0000026	Coil	
FB205	J0JHC0000026	Coil	
FB206	J0JHC0000026	Coil	
FB301	J0JHC0000026	Coil	
FB302	J0JHC0000026	Coil	
FB303	J0JHC0000026	Coil	
FB304	J0JHC0000026	Coil	
FB305	J0JHC0000026	Coil	
FB306	J0JHC0000026	Coil	
FB601	J0JHC0000026	Coil	
FB602	J0JHC0000026	Coil	
FB603	J0JHC0000026	Coil	
L51	G1C150K00011	Coil	
L52	G1CR56K00009	Coil	
L53	YELT03N330JT	Coil	
L601	YELT03N101JT	Coil	
L602	YELT03N101JT	Coil	

Ref. No.	Part No.	Part Name & Description	Remarks
L603	YELT03N220JT	Coil	
L702	YELT03N100KT	Coil	
R755	YELTBLM21P3S	Coil	
SWITCH			
SW601	YEAS09250R	Switch	
CRYSTALs			
XL51	H0D720400003	Crystal Oscillator	
XL601	H0J167500010	Crystal Oscillator	
NETWORK RESISTORs			
RA601	D1H810240004	Network Resistor	
RA602	D1H810240004	Network Resistor	
RA603	D1H810240004	Network Resistor	
RA604	D1H810240004	Network Resistor	
RA605	D1H810240004	Network Resistor	
RA606	D1H810240004	Network Resistor	
RA607	D1H810240004	Network Resistor	
RA608	D1H810240004	Network Resistor	
RA609	D1H810240004	Network Resistor	
RA610	D1H810240004	Network Resistor	
RA611	D1H810240004	Network Resistor	
RA612	D1H810240004	Network Resistor	
NEON TUBE			
Z51	J0LE00000002	Neon Tube	
[E9433A] TV Block			
IC's AND TRANSISTORs			
IC101	AN5186FB	IC	
IC102	YEAMCXA2020M	IC	
IC103	C1AB00001604	IC	
IC104	YEAMPC2905E1	IC	
IC106	YEAMPC4570T1	IC	
IC107	C1AB00000459	IC	
IC108	YEAMPC4570T1	IC	
IC109	C0DBAJG00002	IC	
IC110	YEAMC78L05E2	IC	
IC111	YEAMPC4570T1	IC	
IC112	YEAMPC4570T1	IC	
IC113	YEAMPC4570T1	IC	
IC710	C0DBEKG00001	IC	
PA101	J3AAAAB00001	TV Tuner	
Q101	B1GBCFJJ0002	Transistor	
Q102	B1GBCFJJ0002	Transistor	
Q103	B1GBCFJJ0002	Transistor	
Q104	B1GBCFJJ0002	Transistor	

Ref. No.	Part No.	Part Name & Description	Remarks
Q107	2SD0601AHR	Transistor	
Q108	XN0F26100L	Transistor	
Q109	2SB709TX	Transistor	
Q110	B1GDCFLL0010	Transistor	
Q111	YEANA114TK	Transistor	
Q112	XN0F26100L	Transistor	
Q113	2SB709TX	Transistor	
DIODEs			
D101	PQVDRN731VTE	Diode	
D102	PQVDRN731VTE	Diode	
D103	PQVDRN731VTE	Diode	
D104	PQVDRN731VTE	Diode	
D105	YEADSR1544TL	Diode	
D106	MA3X028TAL	Diode	
D107	B0ADCJ000020	Diode	
D108	B0JCQD000002	Diode	
D109	B0ADCJ000020	Diode	
CAPACITORs			
C100	F1J1H102A672	Ceramic, 1000PF 50WV	
C101	F1J1H102A672	Ceramic, 1000PF 50WV	
C102	F1J1H102A672	Ceramic, 1000PF 50WV	
C103	F1J1H102A672	Ceramic, 1000PF 50WV	
C104	F1J1H102A672	Ceramic, 1000PF 50WV	
C105	YECUS1H470JC	Ceramic, 47PF 50WV	
C106	F1J1H102A672	Ceramic, 1000PF 50WV	
C107	YECUS1H470JC	Ceramic, 47PF 50WV	
C108	YECUS1H470JC	Ceramic, 47PF 50WV	
C109	F1J1H102A672	Ceramic, 1000PF 50WV	
C110	YECUS1H470JC	Ceramic, 47PF 50WV	
C111	F1J1H102A672	Ceramic, 1000PF 50WV	
C112	F1J1H151A672	Ceramic, 150PF 50WV	
C113	F1J1H151A672	Ceramic, 150PF 50WV	
C114	F1J1H151A672	Ceramic, 150PF 50WV	
C115	F1J1H151A672	Ceramic, 150PF 50WV	
C116	F1J1C1050013	Ceramic, 1 μF 16WV	
C117	F1J1H103A673	Ceramic, 0.01 μF 50WV	
C118	ECA0JM101I	Electrolytic, 100 μF 6.3WV	
C119	ECA1CM100I	Electrolytic, 10 μF 16WV	
C120	F1J1C1050013	Ceramic, 1 μF 16WV	
C121	ECA1CM470I	Electrolytic, 47 μF 16WV	
C122	F1J1H103A673	Ceramic, 0.01 μF 50WV	
C123	F1J1H103A673	Ceramic, 0.01 μF 50WV	
C124	YECUS1C104KX	Ceramic, 0.1 μF 16WV	
C125	ECA1CM220I	Electrolytic, 22 μF 16WV	
C126	YECUV0J106KX	Ceramic, 10 μF 6.3WV	

Ref. No.	Part No.	Part Name & Description	Remarks
C127	YECUS1C104KX	Ceramic, 0.1 μ F 16WV	
C128	YECUS1E223KX	Ceramic, 0.022 μ F 25WV	
C129	YECUS1C104KX	Ceramic, 0.1 μ F 16WV	
C130	YECUS1E223KX	Ceramic, 0.022 μ F 25WV	
C131	YECUS1C104KX	Ceramic, 0.1 μ F 16WV	
C132	F1J1H103A673	Ceramic, 0.01 μ F 50WV	
C133	ECA1CM470I	Electrolytic, 47 μ F 16WV	
C134	F1J1H1810002	Ceramic, 180PF 50WV	
C135	F1J1H102A672	Ceramic, 1000PF 50WV	
C136	YECUS1E223KX	Ceramic, 0.022 μ F 25WV	
C137	YECUS1E473KX	Ceramic, 0.047 μ F 25WV	
C138	F1J1C1050013	Ceramic, 1 μ F 16WV	
C139	F1J1H103A673	Ceramic, 0.01 μ F 50WV	
C140	YECUS1H100CC	Ceramic, 10PF 50WV	
C141	YECUS1E473KX	Ceramic, 0.047 μ F 25WV	
C142	YECUS1C104KX	Ceramic, 0.1 μ F 16WV	
C143	ECA1AM221I	Electrolytic, 220 μ F 10WV	
C144	EEUFC1A181H	Electrolytic, 180 μ F 10WV	
C145	YECUS1C104KX	Ceramic, 0.1 μ F 16WV	
C146	YECUS1C104KX	Ceramic, 0.1 μ F 16WV	
C147	ECA1AM221I	Electrolytic, 220 μ F 10WV	
C148	F1J1H471A665	Ceramic, 470PF 50WV	
C149	F1J1H102A672	Ceramic, 1000PF 50WV	
C150	YECUS1C104KX	Ceramic, 0.1 μ F 16WV	
C151	F1J1C1050013	Ceramic, 1 μ F 16WV	
C152	ECA1CM100I	Electrolytic, 10 μ F 16WV	
C153	ECA1CM470I	Electrolytic, 47 μ F 16WV	
C154	F1J1H103A673	Ceramic, 0.01 μ F 50WV	
C155	ECA1CM100I	Electrolytic, 10 μ F 16WV	
C156	YECUS1C104KX	Ceramic, 0.1 μ F 16WV	
C157	F1J1C1050013	Ceramic, 1 μ F 16WV	
C158	F1J1C1050013	Ceramic, 1 μ F 16WV	
C159	ECA1CM100I	Electrolytic, 10 μ F 16WV	
C160	F1J1C1050013	Ceramic, 1 μ F 16WV	
C163	ECA1AM221I	Electrolytic, 220 μ F 10WV	
C164	YECUS1C104KX	Ceramic, 0.1 μ F 16WV	
C165	YECUS1C104KX	Ceramic, 0.1 μ F 16WV	
C166	YECUS1C104KX	Ceramic, 0.1 μ F 16WV	
C167	YECUS1C104KX	Ceramic, 0.1 μ F 16WV	
C168	YECUS1C104KX	Ceramic, 0.1 μ F 16WV	

Ref. No.	Part No.	Part Name & Description	Remarks
C169	YECUS1C104KX	Ceramic, 0.1 μF 16WV	
C170	YECUS1C104KX	Ceramic, 0.1 μF 16WV	
C171	YECUS1C104KX	Ceramic, 0.1 μF 16WV	
C172	ECA1AM221I	Electrolytic, 220 μF 10WV	
C173	YECUS1C104KX	Ceramic, 0.1 μF 16WV	
C174	YECUS1C104KX	Ceramic, 0.1 μF 16WV	
C175	ECA1CM100I	Electrolytic, 10 μF 16WV	
C177	YECUS1C104KX	Ceramic, 0.1 μF 16WV	
C178	ECA1CM100I	Electrolytic, 10 μF 16WV	
C180	ECA1CM100I	Electrolytic, 10 μF 16WV	
C182	ECA1CM470I	Electrolytic, 47 μF 16WV	
C183	ECA1AM101I	Electrolytic, 100 μF 10WV	
C184	YECUS1C104KX	Ceramic, 0.1 μF 16WV	
C185	YECUS1C104KX	Ceramic, 0.1 μF 16WV	
C186	ECA1AM221I	Electrolytic, 220 μF 10WV	
C187	ECA1AM221I	Electrolytic, 220 μF 10WV	
C188	YECUS1C104KX	Ceramic, 0.1 μF 16WV	
C189	ECA1AM101I	Electrolytic, 100 μF 10WV	
C190	ECA1CM471	Electrolytic, 470 μF 16WV	
C192	ECA1CM100I	Electrolytic, 10 μF 16WV	
C193	ECA1CM100I	Electrolytic, 10 μF 16WV	
C194	F1J1H560A025	Ceramic, 56PF 50WV	
C195	F1J1H560A025	Ceramic, 56PF 50WV	
C196	ECA1CM100I	Electrolytic, 10 μF 16WV	
C197	YECUS1C104KX	Ceramic, 0.1 μF 16WV	
C198	ECA1CM100I	Electrolytic, 10 μF 16WV	
C199	ECA1CM100I	Electrolytic, 10 μF 16WV	
C200	F1J1H561A675	Ceramic, 560PF 50WV	
C201	F1J1C1050013	Ceramic, 1 μF 16WV	
C202	YECUS1H393KX	Ceramic, 0.039 μF 50WV	
C208	ECA1CM100I	Electrolytic, 10 μF 16WV	
C209	ECA1CM100I	Electrolytic, 10 μF 16WV	
C210	YECUS1H330JM	Ceramic, 33PF 50WV	
C211	YECUS1H330JM	Ceramic, 33PF 50WV	
C212	ECA1CM100I	Electrolytic, 10 μF 16WV	
C213	ECA1CM100I	Electrolytic, 10 μF 16WV	
C214	ECA1CM100I	Electrolytic, 10 μF 16WV	
C216	ECA1CM100I	Electrolytic, 10 μF 16WV	
C218	ECA1CM100I	Electrolytic, 10 μF 16WV	
C219	YECUS1H330JM	Ceramic, 33PF 50WV	
C220	ECA1CM100I	Electrolytic, 10 μF 16WV	

Ref. No.	Part No.	Part Name & Description	Remarks
C221	ECA1CM100I	Electrolytic, 10 μ F 16WV	
C222	YECUS1H330JM	Ceramic, 33PF 50WV	
C223	ECA1CM100I	Electrolytic, 10 μ F 16WV	
C224	F1J1H560A025	Ceramic, 56PF 50WV	
C225	ECA1CM100I	Electrolytic, 10 μ F 16WV	
C227	F1J1H561A675	Ceramic, 560PF 50WV	
C228	ECA1CM100I	Electrolytic, 10 μ F 16WV	
C235	ECA1CM100I	Electrolytic, 10 μ F 16WV	
C236	ECA1CM471	Electrolytic, 470 μ F 16WV	
C238	ECA1AM101I	Electrolytic, 100 μ F 10WV	
C239	YECUS1H150JC	Ceramic, 15PF 50WV	
C301	F1J1C1050013	Ceramic, 1 μ F 16WV	
C302	YECUS1H393KX	Ceramic, 0.039 μ F 50WV	
C308	ECA1CM100I	Electrolytic, 10 μ F 16WV	
C309	ECA1CM100I	Electrolytic, 10 μ F 16WV	
C310	YECUS1H330JM	Ceramic, 33PF 50WV	
C311	YECUS1H330JM	Ceramic, 33PF 50WV	
C312	ECA1CM100I	Electrolytic, 10 μ F 16WV	
C313	ECA1CM100I	Electrolytic, 10 μ F 16WV	
C314	ECA1CM100I	Electrolytic, 10 μ F 16WV	
C316	ECA1CM100I	Electrolytic, 10 μ F 16WV	
C318	ECA1CM100I	Electrolytic, 10 μ F 16WV	
C319	YECUS1H330JM	Ceramic, 33PF 50WV	
C320	ECA1CM100I	Electrolytic, 10 μ F 16WV	
C321	ECA1CM100I	Electrolytic, 10 μ F 16WV	
C322	YECUS1H330JM	Ceramic, 33PF 50WV	
C323	ECA1CM100I	Electrolytic, 10 μ F 16WV	
C324	F1J1H560A025	Ceramic, 56PF 50WV	
C325	ECA1CM100I	Electrolytic, 10 μ F 16WV	
C701	EEUFC1C331	Electrolytic, 330 μ F 16WV	
C702	F1L1C4750006	Ceramic, 4.7 μ F 16WV	
C703	F1J1H471A665	Ceramic, 470PF 50WV	
C704	F1J1H222A675	Ceramic, 2200PF 50WV	
C705	EEUFC1C331	Electrolytic, 330 μ F 16WV	
C706	F1L1C4750006	Ceramic, 4.7 μ F 16WV	
C707	ECA1CM100I	Electrolytic, 10 μ F 16WV	
C708	ECA0JM101I	Electrolytic, 100 μ F 6.3WV	
C709	YECUS1C104KX	Ceramic, 0.1 μ F 16WV	
C710	YECUS1C104KX	Ceramic, 0.1 μ F 16WV	
C711	ECA1CM101I	Electrolytic, 100 μ F 16WV	
C712	ECA1CM471	Electrolytic, 470 μ F 16WV	
C713	ECA1CM471	Electrolytic, 470 μ F 16WV	

Ref. No.	Part No.	Part Name & Description	Remarks
C714	YECUS1C104KX	Ceramic, 0.1 μ F 16WV	
C715	YECUS1C104KX	Ceramic, 0.1 μ F 16WV	
C716	YECUS1C104KX	Ceramic, 0.1 μ F 16WV	
RESISTORs			
FB106	ERJ6GEY0R00V	Chip, 0 Ω 1/10W	
FB107	ERJ6GEY0R00V	Chip, 0 Ω 1/10W	
FB108	ERJ6GEY0R00V	Chip, 0 Ω 1/10W	
FB109	ERJ6GEY0R00V	Chip, 0 Ω 1/10W	
FB110	ERJ6GEY0R00V	Chip, 0 Ω 1/10W	
FB111	ERJ6GEY0R00V	Chip, 0 Ω 1/10W	
FB112	ERJ6GEY0R00V	Chip, 0 Ω 1/10W	
FB113	ERJ6GEY0R00V	Chip, 0 Ω 1/10W	
FB114	ERJ6GEY0R00V	Chip, 0 Ω 1/10W	
FB120	ERJ6GEY0R00V	Chip, 0 Ω 1/10W	
FB121	ERJ6GEY0R00V	Chip, 0 Ω 1/10W	
FB122	ERJ6GEY0R00V	Chip, 0 Ω 1/10W	
FB201	ERJ6GEY0R00V	Chip, 0 Ω 1/10W	
FB202	ERJ6GEY0R00V	Chip, 0 Ω 1/10W	
FB203	ERJ6GEY0R00V	Chip, 0 Ω 1/10W	
FB301	ERJ6GEY0R00V	Chip, 0 Ω 1/10W	
FB302	ERJ6GEY0R00V	Chip, 0 Ω 1/10W	
FB303	ERJ6GEY0R00V	Chip, 0 Ω 1/10W	
R101	ERJ6GEYJ103	Chip, 10k Ω 1/10W	
R102	ERJ6GEYJ104	Chip, 100k Ω 1/10W	
R103	ERJ6GEYJ101	Chip, 100 Ω 1/10W	
R104	ERJ6GEYJ101	Chip, 100 Ω 1/10W	
R105	ERJ6GEYJ101	Chip, 100 Ω 1/10W	
R106	ERJ6GEYJ101	Chip, 100 Ω 1/10W	
R107	ERJ6GEYJ470	Chip, 47 Ω 1/10W	
R108	ERJ6GEY0R00V	Chip, 0 Ω 1/10W	
R109	ERJ6GEYJ471	Chip, 470 Ω 1/10W	
R110	ERJ6GEYJ392	Chip, 3.9k Ω 1/10W	
R111	ERJ6GEYJ102	Chip, 1k Ω 1/10W	
R112	ERJ6GEYJ432V	Chip, 4.3k Ω 1/10W	
R113	ERJ6ENF5600V	Chip, 560 Ω 1/10W	
R114	ERJ6ENF5600V	Chip, 560 Ω 1/10W	
R115	ERJ6GEYJ183	Chip, 18k Ω 1/10W	
R116	ERJ6GEYJ102	Chip, 1k Ω 1/10W	
R117	ERJ6GEYJ562	Chip, 5.6k Ω 1/10W	
R118	ERJ6GEYJ272	Chip, 2.7k Ω 1/10W	
R119	ERJ6GEYJ102	Chip, 1k Ω 1/10W	
R120	ERJ6GEYJ181	Chip, 180 Ω 1/10W	
R121	ERJ6GEYJ101	Chip, 100 Ω 1/10W	

Ref. No.	Part No.	Part Name & Description	Remarks
R122	ERJ6GEYJ302V	Chip, 3k Ω 1/10W	
R123	ERJ6GEYJ333	Chip, 33k Ω 1/10W	
R124	ERJ6GEYJ103	Chip, 10k Ω 1/10W	
R125	ERJ6GEYJ393	Chip, 39k Ω 1/10W	
R126	ERJ6GEYJ392	Chip, 3.9k Ω 1/10W	
R127	ERJ6GEYJ222	Chip, 2.2k Ω 1/10W	
R128	ERJ6GEYJ682	Chip, 6.8k Ω 1/10W	
R129	ERJ6GEYJ103	Chip, 10k Ω 1/10W	
R130	ERJ6GEYJ222	Chip, 2.2k Ω 1/10W	
R131	ERJ6GEYJ332	Chip, 3.3k Ω 1/10W	
R132	ERJ6GEYJ103	Chip, 10k Ω 1/10W	
R133	ERJ6GEYJ202V	Chip, 2k Ω 1/10W	
R134	ERJ6GEYJ102	Chip, 1k Ω 1/10W	
R135	ERJ6GEYJ101	Chip, 100 Ω 1/10W	
R136	ERJ6GEYJ331	Chip, 330 Ω 1/10W	
R137	ERJ6GEYJ124	Chip, 120k Ω 1/10W	
R138	ERJ6GEYJ101	Chip, 100 Ω 1/10W	
R139	ERJ6GEYJ474	Chip, 470k Ω 1/10W	
R140	ERJ6GEYJ222	Chip, 2.2k Ω 1/10W	
R141	ERJ6GEYJ153	Chip, 15k Ω 1/10W	
R142	ERJ6GEYJ392	Chip, 3.9k Ω 1/10W	
R143	ERJ6GEYJ562	Chip, 5.6k Ω 1/10W	
R144	ERJ6GEYJ103	Chip, 10k Ω 1/10W	
R145	ERJ6GEYJ103	Chip, 10k Ω 1/10W	
R146	ERJ6GEYJ103	Chip, 10k Ω 1/10W	
R147	ERJ6GEYJ221V	Chip, 220 Ω 1/10W	
R148	ERJ6GEYJ221V	Chip, 220 Ω 1/10W	
R150	ERJ6GEYJ221V	Chip, 220 Ω 1/10W	
R151	ERJ6GEYJ221V	Chip, 220 Ω 1/10W	
R152	ERJ6GEYJ221V	Chip, 220 Ω 1/10W	
R153	ERJ6GEYJ221V	Chip, 220 Ω 1/10W	
R154	ERJ6GEYJ750V	Chip, 75 Ω 1/10W	
R155	ERJ6GEYJ333	Chip, 33k Ω 1/10W	
R156	ERJ6GEYJ333	Chip, 33k Ω 1/10W	
R157	ERJ6GEYJ333	Chip, 33k Ω 1/10W	
R158	ERJ6GEYJ333	Chip, 33k Ω 1/10W	
R159	ERJ6GEYJ333	Chip, 33k Ω 1/10W	
R160	ERJ6GEYJ333	Chip, 33k Ω 1/10W	
R161	ERJ6GEYJ333	Chip, 33k Ω 1/10W	
R162	ERJ6GEYJ333	Chip, 33k Ω 1/10W	
R163	ERJ6GEYJ221V	Chip, 220 Ω 1/10W	
R164	ERJ6GEYJ103	Chip, 10k Ω 1/10W	
R165	ERJ6GEYJ103	Chip, 10k Ω 1/10W	
R166	ERJ6GEYJ750V	Chip, 75 Ω 1/10W	
R167	ERJ6GEYJ331	Chip, 330 Ω 1/10W	

Ref. No.	Part No.	Part Name & Description	Remarks
R168	ERJ6GEYJ331	Chip, 330Ω 1/10W	
R169	ERJ6GEYJ680	Chip, 68Ω 1/10W	
R171	ERJ6GEYJ101	Chip, 100Ω 1/10W	
R172	ERJ6ENF1201V	Chip, 1.2kΩ 1/10W	
R173	ERJ6ENF7501V	Chip, 7.5kΩ 1/10W	
R174	ERJ6GEYJ103	Chip, 10kΩ 1/10W	
R175	ERJ6GEYJ102	Chip, 1kΩ 1/10W	
R176	ERJ14YJ470H	Chip, 47Ω 1/4W	
R177	ERJ6GEYJ101	Chip, 100Ω 1/10W	
R178	ERJ6GEYJ750V	Chip, 75Ω 1/10W	
R179	ERJ6GEYJ331	Chip, 330Ω 1/10W	
R180	ERJ6GEYJ331	Chip, 330Ω 1/10W	
R182	ERJ6GEYJ750V	Chip, 75Ω 1/10W	
R183	ERJ6GEYJ471	Chip, 470Ω 1/10W	
R184	ERJ6GEYJ471	Chip, 470Ω 1/10W	
R185	ERJ6GEYJ471	Chip, 470Ω 1/10W	
R186	ERJ6GEYJ471	Chip, 470Ω 1/10W	
R187	ERJ6GEYJ391	Chip, 390Ω 1/10W	
R188	ERJ8GEY0R00V	Chip, 0Ω 1/8W	
R189	ERJ8GEY0R00V	Chip, 0Ω 1/8W	
R201	ERJ6GEYJ102	Chip, 1kΩ 1/10W	
R202	ERJ6GEYJ683	Chip, 68kΩ 1/10W	
R203	ERJ6GEYJ683	Chip, 68kΩ 1/10W	
R205	ERJ6GEYJ101	Chip, 100Ω 1/10W	
R206	ERJ6GEYJ562	Chip, 5.6kΩ 1/10W	
R207	ERJ6GEYJ123	Chip, 12kΩ 1/10W	
R212	ERJ6GEYJ473	Chip, 47kΩ 1/10W	
R213	ERJ6GEYJ473	Chip, 47kΩ 1/10W	
R214	ERJ6GEYJ473	Chip, 47kΩ 1/10W	
R215	ERJ6GEYJ473	Chip, 47kΩ 1/10W	
R216	ERJ6GEYJ561	Chip, 560Ω 1/10W	
R217	ERJ6GEYJ473	Chip, 47kΩ 1/10W	
R218	ERJ6GEYJ473	Chip, 47kΩ 1/10W	
R219	ERJ6GEYJ473	Chip, 47kΩ 1/10W	
R220	ERJ6GEYJ912V	Chip, 9.1kΩ 1/10W	
R221	ERJ6GEYJ473	Chip, 47kΩ 1/10W	
R222	ERJ6GEYJ473	Chip, 47kΩ 1/10W	
R223	ERJ6GEYJ473	Chip, 47kΩ 1/10W	
R224	ERJ6GEYJ473	Chip, 47kΩ 1/10W	
R225	ERJ6GEYJ104	Chip, 100kΩ 1/10W	
R226	ERJ6GEYJ333	Chip, 33kΩ 1/10W	
R227	ERJ6GEYJ303V	Chip, 30kΩ 1/10W	
R228	ERJ6GEYJ561	Chip, 560Ω 1/10W	
R229	ERJ6GEYJ473	Chip, 47kΩ 1/10W	
R301	ERJ6GEYJ102	Chip, 1kΩ 1/10W	

Ref. No.	Part No.	Part Name & Description	Remarks
R302	ERJ6GEYJ683	Chip, 68k Ω 1/10W	
R303	ERJ6GEYJ683	Chip, 68k Ω 1/10W	
R305	ERJ6GEYJ101	Chip, 100 Ω 1/10W	
R306	ERJ6GEYJ562	Chip, 5.6k Ω 1/10W	
R307	ERJ6GEYJ123	Chip, 12k Ω 1/10W	
R312	ERJ6GEYJ473	Chip, 47k Ω 1/10W	
R313	ERJ6GEYJ473	Chip, 47k Ω 1/10W	
R314	ERJ6GEYJ473	Chip, 47k Ω 1/10W	
R315	ERJ6GEYJ473	Chip, 47k Ω 1/10W	
R316	ERJ6GEYJ561	Chip, 560 Ω 1/10W	
R317	ERJ6GEYJ473	Chip, 47k Ω 1/10W	
R318	ERJ6GEYJ473	Chip, 47k Ω 1/10W	
R319	ERJ6GEYJ473	Chip, 47k Ω 1/10W	
R320	ERJ6GEYJ103	Chip, 10k Ω 1/10W	
R321	ERJ6GEYJ473	Chip, 47k Ω 1/10W	
R322	ERJ6GEYJ473	Chip, 47k Ω 1/10W	
R323	ERJ6GEYJ473	Chip, 47k Ω 1/10W	
R324	ERJ6GEYJ473	Chip, 47k Ω 1/10W	
R325	ERJ6GEYJ104	Chip, 100k Ω 1/10W	
R326	ERJ6GEYJ333	Chip, 33k Ω 1/10W	
R327	ERJ6GEYJ303V	Chip, 30k Ω 1/10W	
R328	ERJ6GEYJ561	Chip, 560 Ω 1/10W	
R329	ERJ6GEYJ473	Chip, 47k Ω 1/10W	
R710	ERJ6ENF1201V	Chip, 1.2k Ω 1/10W	
R711	ERJ6GEYJ221V	Chip, 220 Ω 1/10W	
R712	ERJ6ENF7501V	Chip, 7.5k Ω 1/10W	
CONNECTORs			
CJ101	YEAELGY6502	Connector, 3P	
CJ102	YEAELGY6502	Connector, 3P	
CJ103	YEAELGY6502	Connector, 3P	
CJ104	YEAELGY6502	Connector, 3P	
CN102	K2HA306B0033	Jack	
CN103	K2HA306B0033	Jack	
CN104	K2HA306B0033	Jack	
CN105	YEAEC27020	Connector, 20P	
CN106	K1MN30B00074	Connector, 30P	
CN107	K1KA08A00096	Connector, 8P	
COILs			
FB101	YELTBLM2B601	Coil	
FB102	YELTBLM2B601	Coil	
FB103	YELTBLM2B601	Coil	
FB104	YELTBLM2B601	Coil	
FB123	YELTBLM32A06	Coil	
L101	ELJFCR27MF	Choke Coil	
L102	ELJFCR27MF	Choke Coil	

Ref. No.	Part No.	Part Name & Description	Remarks
L103	ELJFCR27MF	Choke Coil	
L104	ELJFCR27MF	Choke Coil	
L105	ELJFCR27MF	Choke Coil	
L106	ELJFCR27MF	Choke Coil	
L107	ELJFCR27MF	Choke Coil	
L108	ELJFCR27MF	Choke Coil	
L109	ELJFCR68MF	Choke Coil	
L110	YELT03N100KT	Coil	
L111	G3BRB0000007	RF Coil	
L112	YELT03N100KT	Coil	
L113	YELT03N220JT	Coil	
L114	G3A1R2C00005	RF Coil	
L115	YELT03N100KT	Coil	
L116	YELT03N101JT	Coil	
L117	G1C101Z00005	Coil	
L118	YELT03N220JT	Coil	
L119	YELT03N101JT	Coil	
CRYSTAL			
XL101	H0D305500002	Crystal Oscillator	
FILTERs			
CF101	J0B4504A0033	Filter	
CF102	J0B1075A0028	Filter	
SF101	J0C4575B0001	Filter	
SF102	J0C4125B0001	Filter	
VARIAVLE RESISTORs			
VR101	EVM1SSX50B14	Variablr resistor	
VR102	EVM3YSX50B54	Variablr resistor	
VR103	EVM1SSX50B53	Variablr resistor	
[E9434A] D-AMP Block			
IC's AND TRANSISTORs			
IC206	C0ABCB000032	IC	
IC207	C1BA00000371	IC	
IC306	YEAMPC4570T1	IC	
IC307	AN7190NZ	IC	
IC308	YEAMPC4570T1	IC	
IC701	C5HAAKH00001	IC	
IC702	YEAMM51945AF	IC	
Q204	B1GBHBEA0004	Transistor	
Q205	B1GBHBEA0004	Transistor	
Q304	B1GBHBEA0004	Transistor	
Q305	B1GBHBEA0004	Transistor	
Q306	B1GBHBEA0004	Transistor	
Q615	B1GBCFNN0004	Transistor	
Q616	YEANC114YKX	Transistor	
Q617	B1GDCFNN0002	Transistor	

Ref. No.	Part No.	Part Name & Description	Remarks
Q618	YEANC114YKX	Transistor	
Q701	YEANA1647ZT	Transistor	
Q702	YEANFB1F3PT1	Transistor	
Q703	YEANFP1F3PT1	Transistor	
Q704	B1GBCFJJ0002	Transistor	
Q705	YEANHQ1F3PT1	Transistor	
Q706	YEANC114YKX	Transistor	
Q707	YEANHQ1F3PT1	Transistor	
Q708	YEANC114YKX	Transistor	
Q709	B1GDCFNN0002	Transistor	
Q710	YEANHQ1F3PT1	Transistor	
Q711	YEANC114YKX	Transistor	
Q712	YEANHQ1F3PT1	Transistor	
Q713	YEANC114YKX	Transistor	
DIODEs			
D302	B0ADCJ000020	Diode	
D303	B0ADCJ000020	Diode	
D304	B0ACCK000005	Diode	
D701	YEADDAM3MA47	Diode	
D702	MA3X152K0L	Diode	
D703	YEADEC10DS1	Diode	
D708	B0ACCK000005	Diode	
D710	YEADEC10DS1	Diode	
D750	MA736TX	Diode	
D751	MA736TX	Diode	
D752	MA736TX	Diode	
D753	MA736TX	Diode	
D754	MA736TX	Diode	
D755	MA736TX	Diode	
D756	MA736TX	Diode	
D757	MA736TX	Diode	
D758	MA736TX	Diode	
D759	MA736TX	Diode	
D760	MA736TX	Diode	
D761	MA736TX	Diode	
D762	MA736TX	Diode	
D763	MA736TX	Diode	
D764	MA736TX	Diode	
D765	MA736TX	Diode	
D766	MA736TX	Diode	
D767	MA736TX	Diode	
CAPACITORs			
C254	ECEV1CA100SR	Electrolytic, 10 μ F 16WV	
C255	F1H1H101A020	Ceramic, 100PF 50WV	
C256	YECUZ1H331JC	Ceramic, 330PF 50WV	
C258	YECUZ1H151JC	Ceramic, 150PF 50WV	
C259	ECEV1CA100SR	Electrolytic, 10 μ F 16WV	
C260	ECEV1HA010SR	Electrolytic, 1 μ F 50WV	

Ref. No.	Part No.	Part Name & Description	Remarks
C261	ECEV1CA100SR	Electrolytic, 10 μ F 16WV	
C262	ECEV1HA010SR	Electrolytic, 1 μ F 50WV	
C265	ECQV1H474JL2	Plastic Film, 0.47 μ F 50WV	
C266	ECQV1H474JL2	Plastic Film, 0.47 μ F 50WV	
C267	ECQV1H474JL2	Plastic Film, 0.47 μ F 50WV	
C268	ECQV1H104JL2	Plastic Film, 0.1 μ F 50WV	
C269	ECQV1H474JL2	Plastic Film, 0.47 μ F 50WV	
C270	ECQV1H474JL2	Plastic Film, 0.47 μ F 50WV	
C271	ECQV1H474JL2	Plastic Film, 0.47 μ F 50WV	
C272	ECQV1H104JL2	Plastic Film, 0.1 μ F 50WV	
C280	F1J1C1050013	Ceramic, 1 μ F 16WV	
C281	F1J1H1040014	Ceramic, 0.1 μ F 50WV	
C282	ECA1CM101I	Electrolytic, 100 μ F 16WV	
C283	ECA1CM100I	Electrolytic, 10 μ F 16WV	
C284	F1J1H1040014	Ceramic, 0.1 μ F 50WV	
C285	ECA1CM101I	Electrolytic, 100 μ F 16WV	
C286	F1J1H1040014	Ceramic, 0.1 μ F 50WV	
C288	F1J1H681A672	Ceramic, 680PF 50WV	
C289	F1J1H681A672	Ceramic, 680PF 50WV	
C290	F1J1H681A672	Ceramic, 680PF 50WV	
C291	F1J1H681A672	Ceramic, 680PF 50WV	
C292	F1J1H681A672	Ceramic, 680PF 50WV	
C293	F1J1H103A513	Ceramic, 0.01 μ F 50WV	
C294	F1J1H681A672	Ceramic, 680PF 50WV	
C295	F1J1H103A513	Ceramic, 0.01 μ F 50WV	
C296	F1J1H681A672	Ceramic, 680PF 50WV	
C297	F1J1H103A513	Ceramic, 0.01 μ F 50WV	
C298	F1J1H681A672	Ceramic, 680PF 50WV	
C299	F1J1H103A513	Ceramic, 0.01 μ F 50WV	
C354	ECEV1CA100SR	Electrolytic, 10 μ F 16WV	
C355	F1H1H101A020	Ceramic, 100PF 50WV	
C356	YECUZ1H331JC	Ceramic, 330PF 50WV	
C358	YECUZ1H151JC	Ceramic, 150PF 50WV	
C359	ECEV1CA100SR	Electrolytic, 10 μ F 16WV	
C360	ECEV1HA010SR	Electrolytic, 1 μ F 50WV	
C361	ECEV1CA100SR	Electrolytic, 10 μ F 16WV	
C362	ECEV1HA010SR	Electrolytic, 1 μ F 50WV	
C365	ECQV1H474JL2	Plastic Film, 0.47 μ F 50WV	
C366	ECQV1H474JL2	Plastic Film, 0.47 μ F 50WV	
C367	ECQV1H474JL2	Plastic Film, 0.47 μ F 50WV	
C368	ECQV1H104JL2	Plastic Film, 0.1 μ F 50WV	
C369	ECQV1H474JL2	Plastic Film, 0.47 μ F 50WV	

Ref. No.	Part No.	Part Name & Description	Remarks
C370	ECQV1H474JL2	Plastic Film, 0.47 μF 50WV	
C371	F1K1A1060015	Ceramic, 10 μF 10WV	
C372	F1K1A1060015	Ceramic, 10 μF 10WV	
C373	YECUS1C224KX	Ceramic, 0.22 μF 16WV	
C374	YECUS1C224KX	Ceramic, 0.22 μF 16WV	
C375	F1H1H152A021	Ceramic, 1500PF 50WV	
C376	F1J1H103A513	Ceramic, 0.01 μF 50WV	
C377	ECA1CM100I	Electrolytic, 10 μF 16WV	
C378	F1H1H152A021	Ceramic, 1500PF 50WV	
C379	YECUS1C224KX	Ceramic, 0.22 μF 16WV	
C380	YECUS1C224KX	Ceramic, 0.22 μF 16WV	
C381	ECQV1H474JL2	Plastic Film, 0.47 μF 50WV	
C382	ECQV1H104JL2	Plastic Film, 0.1 μF 50WV	
C383	F1J1H681A672	Ceramic, 680PF 50WV	
C384	F1J1H681A672	Ceramic, 680PF 50WV	
C385	F1J1C1050013	Ceramic, 1 μF 16WV	
C386	YECUZ1C104KX	Ceramic, 0.1 μF 16WV	
C387	ECA1CM101I	Electrolytic, 100 μF 16WV	
C388	F1J1H681A672	Ceramic, 680PF 50WV	
C389	F1J1H681A672	Ceramic, 680PF 50WV	
C390	F1J1H681A672	Ceramic, 680PF 50WV	
C391	F1J1H681A672	Ceramic, 680PF 50WV	
C392	F1J1H681A672	Ceramic, 680PF 50WV	
C393	F1J1H103A513	Ceramic, 0.01 μF 50WV	
C394	F1J1H681A672	Ceramic, 680PF 50WV	
C395	F1J1H103A513	Ceramic, 0.01 μF 50WV	
C396	F1J1H681A672	Ceramic, 680PF 50WV	
C397	F1J1H103A513	Ceramic, 0.01 μF 50WV	
C398	F1J1H681A672	Ceramic, 680PF 50WV	
C399	F1J1H103A513	Ceramic, 0.01 μF 50WV	
C632	F1J1H472A675	Ceramic, 4700PF 50WV	
C636	F1J1H103A513	Ceramic, 0.01 μF 50WV	
C701	YECUV1C104KX	Ceramic, 0.1 μF 16WV	
C702	ECA1CDT102BQ	Electrolytic, 1000 μF 16WV	
C714	ECA1CDT472	Electrolytic, 4700 μF 16WV	
C715	F1J1H1040014	Ceramic, 0.1 μF 50WV	
C716	F1J1H103A513	Ceramic, 0.01 μF 50WV	
C717	F1J1H103A513	Ceramic, 0.01 μF 50WV	
C718	EEUFK1E332	Electrolytic, 3300 μF 25WV	
C719	EEUFK1C392S	Electrolytic, 3900 μF 16WV	
C720	ECA1HHG3R3I	Electrolytic, 3.3 μF 50WV	
C722	ECA1HHG2R2I	Electrolytic, 2.2 μF 50WV	

Ref. No.	Part No.	Part Name & Description	Remarks
C723	F1J1H103A513	Ceramic, 0.01 μF 50WV	
C724	YECUS1E104ZF	Ceramic, 0.1 μF 25WV	
C725	YECUS1E104ZF	Ceramic, 0.1 μF 25WV	
C726	YECUS1E104ZF	Ceramic, 0.1 μF 25WV	
C727	YECUS1E104ZF	Ceramic, 0.1 μF 25WV	
C728	YECUS1E104ZF	Ceramic, 0.1 μF 25WV	
C729	YECUS1E104ZF	Ceramic, 0.1 μF 25WV	
C730	YECUS1E104ZF	Ceramic, 0.1 μF 25WV	
C731	YECUS1E104ZF	Ceramic, 0.1 μF 25WV	
C733	YECUZ1C104KX	Ceramic, 0.1 μF 16WV	
C734	YECUZ1C104KX	Ceramic, 0.1 μF 16WV	
C735	YECUZ1C104KX	Ceramic, 0.1 μF 16WV	
C736	YECUZ1C104KX	Ceramic, 0.1 μF 16WV	
C737	YECUZ1C104KX	Ceramic, 0.1 μF 16WV	
C738	F1J1H1040014	Ceramic, 0.1 μF 50WV	
C742	F1J1H1040014	Ceramic, 0.1 μF 50WV	
C744	ECEA1HKS4R7I	Electrolytic, 4.7 μF 50WV	
C745	F1J1H1040014	Ceramic, 0.1 μF 50WV	
C746	F1J1H1040014	Ceramic, 0.1 μF 50WV	
C747	F1J1H1040014	Ceramic, 0.1 μF 50WV	
C748	F1J1H1040014	Ceramic, 0.1 μF 50WV	
C749	F1J1H1040014	Ceramic, 0.1 μF 50WV	
C750	ECA1EHG222	Electrolytic, 2200 μF 25WV	
C751	ECA1EHG222	Electrolytic, 2200 μF 25WV	
C752	EEUFC1A221H	Electrolytic, 220 μF 10WV	
C761	F1J1H1040014	Ceramic, 0.1 μF 50WV	
C764	ECA1CM330I	Electrolytic, 33 μF 16WV	
C765	ECA1CDT472	Electrolytic, 4700 μF 16WV	
C766	F1J1H1040014	Ceramic, 0.1 μF 50WV	
C767	ECEA1HKS4R7I	Electrolytic, 4.7 μF 50WV	
RESISTORs			
R253	ERJ3GEYJ472V	Chip, 4.7k Ω 1/16W	
R254	ERJ3GEYJ472V	Chip, 4.7k Ω 1/16W	
R255	ERJ3GEYJ332V	Chip, 3.3k Ω 1/16W	
R256	ERJ3GEYJ562V	Chip, 5.6k Ω 1/16W	
R257	ERJ3GEY0R00V	Chip, 0 Ω 1/16W	
R258	ERJ3GEYJ472V	Chip, 4.7k Ω 1/16W	
R259	ERJ6GEYJ223	Chip, 22k Ω 1/10W	
R260	ERJ3GEYJ153V	Chip, 15k Ω 1/16W	

Ref. No.	Part No.	Part Name & Description	Remarks
R261	ERJ3GEY0R00V	Chip, 0 Ω 1/16W	
R262	ERJ3GEYJ102V	Chip, 1k Ω 1/16W	
R263	ERJ6GEYJ562	Chip, 5.6k Ω 1/10W	
R264	ERJ3GEYJ102V	Chip, 1k Ω 1/16W	
R265	ERJ6GEYJ562	Chip, 5.6k Ω 1/10W	
R266	ERF10TJ100	Cement, 10 Ω 10W	
R267	ERF10TJ100	Cement, 10 Ω 10W	
R268	ERJ8GEYJ100V	Chip, 10 Ω 1/8W	
R269	ERJ8GEYJ100V	Chip, 10 Ω 1/8W	
R270	ERJ8GEYJ100V	Chip, 10 Ω 1/8W	
R271	ERJ8GEYJ100V	Chip, 10 Ω 1/8W	
R280	ERJ6GEYJ103	Chip, 10k Ω 1/10W	
R281	ERJ6GEYJ103	Chip, 10k Ω 1/10W	
R353	ERJ3GEYJ472V	Chip, 4.7k Ω 1/16W	
R354	ERJ3GEYJ472V	Chip, 4.7k Ω 1/16W	
R355	ERJ3GEYJ332V	Chip, 3.3k Ω 1/16W	
R356	ERJ3GEYJ562V	Chip, 5.6k Ω 1/16W	
R357	ERJ3GEY0R00V	Chip, 0 Ω 1/16W	
R358	ERJ3GEYJ472V	Chip, 4.7k Ω 1/16W	
R359	ERJ6GEYJ223	Chip, 22k Ω 1/10W	
R360	ERJ3GEYJ153V	Chip, 15k Ω 1/16W	
R361	ERJ3GEY0R00V	Chip, 0 Ω 1/16W	
R362	ERJ3GEYJ102V	Chip, 1k Ω 1/16W	
R363	ERJ6GEYJ562	Chip, 5.6k Ω 1/10W	
R364	ERJ3GEYJ102V	Chip, 1k Ω 1/16W	
R365	ERJ6GEYJ562	Chip, 5.6k Ω 1/10W	
R366	ERF10TJ100	Cement, 10 Ω 10W	
R367	ERF10TJ100	Cement, 10 Ω 10W	
R368	ERJ8GEYJ100V	Chip, 10 Ω 1/8W	
R369	ERJ8GEYJ100V	Chip, 10 Ω 1/8W	
R370	ERJ8GEYJ100V	Chip, 10 Ω 1/8W	
R371	ERJ8GEYJ100V	Chip, 10 Ω 1/8W	
R373	ERJ6GEYJ752V	Chip, 7.5k Ω 1/10W	
R374	ERJ6GEYJ103	Chip, 10k Ω 1/10W	
R375	ERJ6GEYJ2R2	Chip, 2.2 Ω 1/10W	
R376	ERJ6GEYJ2R2	Chip, 2.2 Ω 1/10W	
R377	ERJ3GEYJ472V	Chip, 4.7k Ω 1/16W	
R378	ERJ3GEYJ472V	Chip, 4.7k Ω 1/16W	
R379	ERJ6GEYJ2R2	Chip, 2.2 Ω 1/10W	
R380	ERJ6GEYJ2R2	Chip, 2.2 Ω 1/10W	
R385	ERJ6GEYJ473	Chip, 47k Ω 1/10W	
R386	ERJ6GEYJ473	Chip, 47k Ω 1/10W	
R387	ERJ6GEYJ473	Chip, 47k Ω 1/10W	
R388	ERJ6GEYJ473	Chip, 47k Ω 1/10W	
R662	ERJ3GEY0R00V	Chip, 0 Ω 1/16W	

Ref. No.	Part No.	Part Name & Description	Remarks
R683	ERJ3GEYJ513V	Chip, 51k Ω 1/16W	
R685	ERJ3GEYJ473V	Chip, 47k Ω 1/16W	
R686	ERJ3GEYJ183V	Chip, 18k Ω 1/16W	
R687	ERJ3GEYJ104V	Chip, 100k Ω 1/16W	
R689	ERJ6GEY0R00V	Chip, 0 Ω 1/10W	
R690	ERJ6GEYJ103	Chip, 10k Ω 1/10W	
R701	ERJ6GEYJ473	Chip, 47k Ω 1/10W	
R702	ERJ12YJ102H	Chip, 1k Ω 1/2W	
R703	ERJ12YJ102H	Chip, 1k Ω 1/2W	
R704	ERJ12YJ102H	Chip, 1k Ω 1/2W	
R705	ERJ6GEY0R00V	Chip, 0 Ω 1/10W	
R708	ERJ6GEYJ224	Chip, 220k Ω 1/10W	
R709	ERJ6GEYJ560	Chip, 56 Ω 1/10W	
R710	ERJ3GEYJ473V	Chip, 47k Ω 1/16W	
R711	ERJ3GEYJ562V	Chip, 5.6k Ω 1/16W	
R712	ERJ6GEYJ4R7	Chip, 4.7 Ω 1/10W	
R713	ERJ8GEY0R00V	Chip, 0 Ω 1/8W	
R723	ERJ6GEYJ471	Chip, 470 Ω 1/10W	
R724	ERJ3GEYJ103V	Chip, 10k Ω 1/16W	
R725	ERJ6GEYJ223	Chip, 22k Ω 1/10W	
R726	ERJ6GEYJ223	Chip, 22k Ω 1/10W	
R727	ERJ6GEYJ102	Chip, 1k Ω 1/10W	
R732	ERJ8GEY0R00V	Chip, 0 Ω 1/8W	
CONNECTORs			
CN606	K1MN26B00015	Connector, 26P	
CN701	K1FA116B0028	Connector, 16P	
CN702	YEAEPVH03S	Connector, 3P	
CN703	YEAE5339803	Connector, 3P	
CP608	K1PA06D00013	Connector, 6P	
CP609	K1PA08D00001	Connector, 8P	
COILs			
L201	G1B9R0J00001	Coil	
L202	G1B9R0J00001	Coil	
L301	G1B9R0J00001	Coil	
L302	G1B9R0J00001	Coil	
L701	G0A251J00001	Coil	
L703	J0JKB0000005	Coil	
L704	YETQ022T161	Coil	
L705	J0JKB0000005	Coil	
L706	J0JKB0000005	Coil	
L707	YELT03N330JT	Coil	
THERMISTORs			
PH701	YERT7AR4R7MT	Thermistor	

Ref. No.	Part No.	Part Name & Description	Remarks
PH702	YERT7AR4R7MT	Thermistor	
PH703	YERT7AR4R7MT	Thermistor	
Mechanical Parts			
MISCELLANEOUS			
ANT51	YEAA10058	Antenna Receptacle	
AT1	K4ZZ01000048	Terminal, Radio PCB	
AT1	K4ZZ01000048	Terminal, D-AMP PCB	
AT2	K4ZZ01000048	Terminal, Radio PCB	
AT2	K4ZZ01000048	Terminal, D-AMP PCB	
AT3	K4ZZ01000048	Terminal, Radio PCB	
AT4	K4ZZ01000048	Terminal, Radio PCB	
AT101	YEAT03435	Terminal, TV PCB	
AT102	YEAT03435	Terminal, TV PCB	
AT103	YEAT03435	Terminal, TV PCB	
AT104	YEAT03435	Terminal, TV PCB	
CNP1	K9ZZ00001163	Flat Cable, 26P	
CNP2	K9ZZ00001159	Flat Cable, 30P	
1	YEFA032007	Chassis, Upper	
2	YEFX9995102	Cover, Heat Sink	
3	YEFF011206	Heat Sink, IC207/IC701	
5	YEFR04627	Cap	
6	YEFX0215124	Bracket, CN102/CN103/CN104	
7	YEP0PT9433B0	TV PCB w/Component	RTL
9	YEFS012138	Pad	
10	YEFX0215122	Bracket, CN105/CJ101/CJ102/CJ103/CJ104	
11	YEFX0217068	Bracket	
12	YEP0PT6995B0	RADIO PCB w/Component	RTL
13	YEFX0217060	Bracket, CN601	
14	YEFX0215124	Bracket, CN301/CN201/CN202/CN203	
16	YEFV03834	Magnetic Shield, PA51	
17	YEFS012138	Pad	
19	YEP0PT9434A0	D-AMP PCB w/Component	RTL
20	YEFX0217062	Bracket, IC701	
21	YEFX0217061	Bracket, IC207	
22	YEFX0217063	Bracket, IC307	
23	YEFX0215229	Bracket, CN702	
24	YEFF011207	Heat Sink, IC307	
26	YEFA012205	Chassis, Bottom	
27	YEFX9995201	Cover, Heat Sink	
28	YEAT03349	Terminal	
31	YEJS05016	Screw w/Washer	
32	YEJS05023	Screw w/Washer	
33	YEJT03015	Screw	
34	YEJT03355	Machine Screw	
35	XTB3+6FFX	Screw, M3x6	
36	XTB3+10FFX	Tapping Screw, M3*10	

15. EXPLODED VIEW [Hide-away Unit]

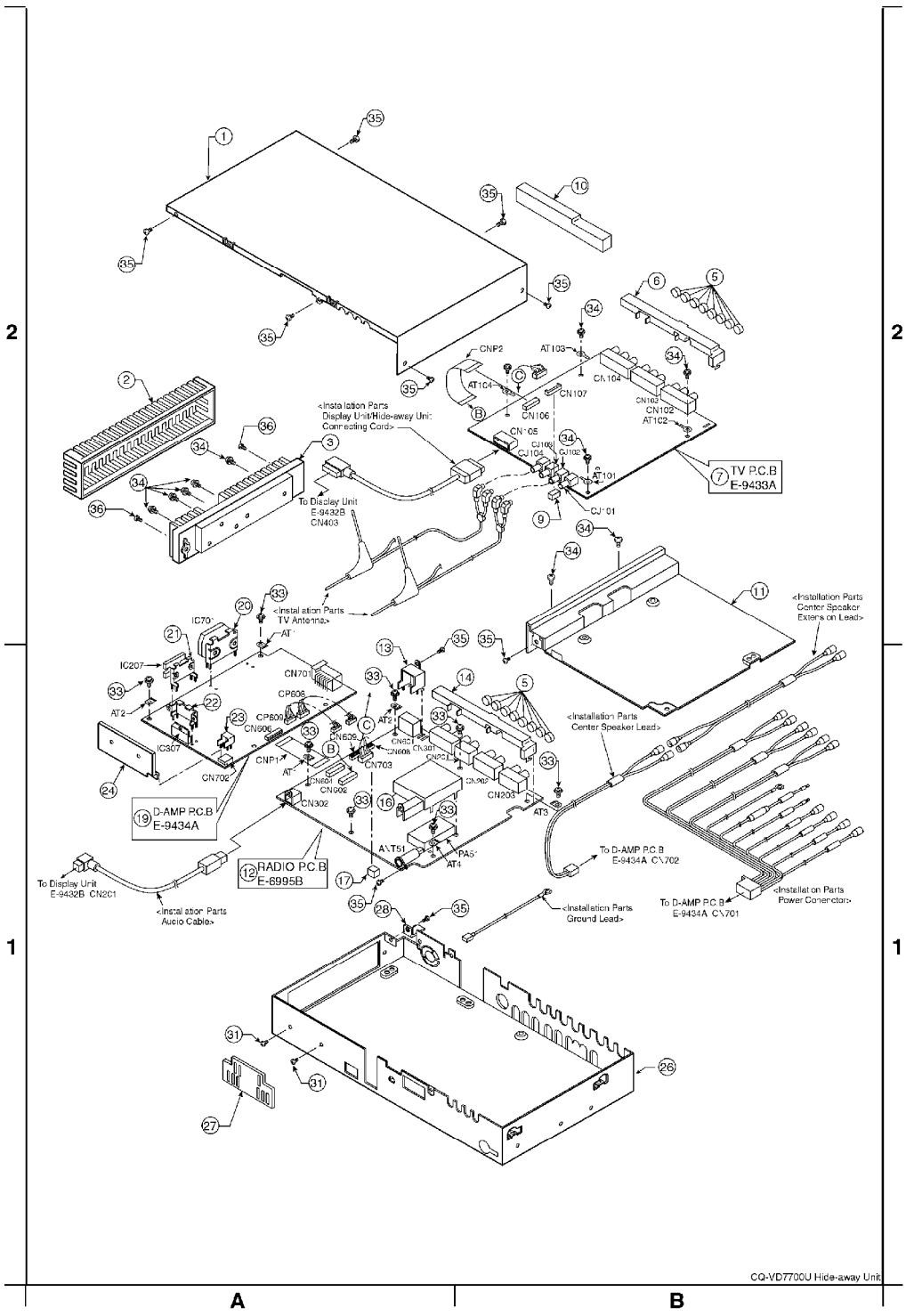

16. DVD PLAYER PARTS LIST

Notes :

1. Be sure to make your orders of replacement parts according to this list.

2. Important safety notice: Components, identified by ⚠ mark have

special characteristics important for safety. When replacing any of these components, use only manufacturer's specified parts.

3. **Location keys in the remarks column indicates the general location of the parts shown in the exploded drawing, as in a road map.**
4. **The marking (RTL) indicates that Retention Time is limited for this item. After the discontinuation of assembly in production, the item will continue to be available for a specific period of time. The retention period of availability is dependent on the type of assembly, and in accordance with the laws governing part and product retention. After the end of this period, the assembly will no longer be available.**

   - Order intake period is basically six months after the first shipment.

Ref. No.	Part No.	Part Name & Description	Remarks
[E9453A] CD Servo Block			
IC's AND TRANSISTORs			
IC101	AN8703FH-V	IC	
IC201	MNZS26EDCUB	IC	
IC271	YEAMT7ST08UL	IC	
IC275	C0JBAZ001014	IC	
IC311	C0GBY0000012	IC	
IC321	C0GBH0000006	IC	
IC411	YEAMC78L05E2	IC	
IC421	YEAM17805FP	IC	
IC431	C0JBAA000102	IC	
IC441	MN13821JP	IC	
IC501	C1AB00001602	IC	
IC561	C0JBAZ001014	IC	
IC601	C3ABPJ000053	IC	
IC621	C3FBMG000017	IC	
IC631	C0JBAH000082	IC	
IC641	C0JBAH000082	IC	
IC651	C3GBCC000001	IC	
IC652	C0JBAB000255	IC	
IC721	C0FBBK000029	IC	
Q151	2SB766ATX	Transistor	
Q152	2SB766ATX	Transistor	
Q153	B1GDCFNN0007	Transistor	
Q154	B1GBCFNN0009	Transistor	
Q251	B3HB00000012	Transistor	
Q253	B3HB00000012	Transistor	
Q301	B1GBGFGG0001	Transistor	
Q321	B1GBGEEA0001	Transistor	

Ref. No.	Part No.	Part Name & Description	Remarks
DIODE			
D311	MA721TX	Diode	
CAPACITORs			
C101	F1G1H561A401	Ceramic, 560PF 50WV	
C102	F1G1A104A014	Ceramic, 0.1 μ F 10WV	
C103	F1G1H102A401	Ceramic, 1000PF 50WV	
C104	F1G1H102A401	Ceramic, 1000PF 50WV	
C113	F1G1A104A014	Ceramic, 0.1 μ F 10WV	
C114	F1J0J106A014	Ceramic, 10 μ F 6.3WV	
C115	F1J0J106A014	Ceramic, 10 μ F 6.3WV	
C116	F1G1H102A401	Ceramic, 1000PF 50WV	
C117	F1J0J106A014	Ceramic, 10 μ F 6.3WV	
C121	F1G1H6R0A037	Ceramic, 6PF 50WV	
C122	F1J0J106A014	Ceramic, 10 μ F 6.3WV	
C124	F1G1A104A014	Ceramic, 0.1 μ F 10WV	
C125	F1G1A104A014	Ceramic, 0.1 μ F 10WV	
C126	F1H1E273A011	Ceramic, 0.027 μ F 25WV	
C127	F1H1C473A005	Ceramic, 0.047 μ F 16WV	
C128	F1G1A104A014	Ceramic, 0.1 μ F 10WV	
C129	F1G1H101A410	Ceramic, 100PF 50WV	
C131	F1G1H561A401	Ceramic, 560PF 50WV	
C132	F1G1H561A401	Ceramic, 560PF 50WV	
C133	F1G1A104A014	Ceramic, 0.1 μ F 10WV	
C134	F1G1A104A014	Ceramic, 0.1 μ F 10WV	
C136	F1G1A104A014	Ceramic, 0.1 μ F 10WV	
C137	F1J0J106A014	Ceramic, 10 μ F 6.3WV	
C141	F1G1C103A033	Ceramic, 0.01 μ F 16WV	
C142	F1G1A104A014	Ceramic, 0.1 μ F 10WV	
C143	F1G1A104A014	Ceramic, 0.1 μ F 10WV	
C144	F1G1A104A014	Ceramic, 0.1 μ F 10WV	
C145	F1G1A104A014	Ceramic, 0.1 μ F 10WV	
C151	F1G1A104A014	Ceramic, 0.1 μ F 10WV	
C152	YECSW0J476MS	Tantalum, 47 μ F 6.3WV	
C153	F1G1A104A014	Ceramic, 0.1 μ F 10WV	
C154	YECSW0J476MS	Tantalum, 47 μ F 6.3WV	
C201	F1G1A104A014	Ceramic, 0.1 μ F 10WV	
C202	F1G1A104A014	Ceramic, 0.1 μ F 10WV	
C203	F1G1A104A014	Ceramic, 0.1 μ F 10WV	
C204	F1G1A104A014	Ceramic, 0.1 μ F 10WV	
C205	F1G1A104A014	Ceramic, 0.1 μ F 10WV	

Ref. No.	Part No.	Part Name & Description	Remarks
C206	F1G1H101A410	Ceramic, 100PF 50WV	
C207	F1J0J106A014	Ceramic, 10 μ F 6.3WV	
C208	F1J0J106A014	Ceramic, 10 μ F 6.3WV	
C211	F1G1A104A014	Ceramic, 0.1 μ F 10WV	
C213	F1G1H101A410	Ceramic, 100PF 50WV	
C214	F1G1H101A410	Ceramic, 100PF 50WV	
C215	F1G1C103A033	Ceramic, 0.01 μ F 16WV	
C216	F1G1C103A033	Ceramic, 0.01 μ F 16WV	
C221	F1G1H220A408	Ceramic, 22PF 50WV	
C222	F1G1H220A408	Ceramic, 22PF 50WV	
C223	F1G1A104A014	Ceramic, 0.1 μ F 10WV	
C224	F1G1A104A014	Ceramic, 0.1 μ F 10WV	
C225	F1G1A104A014	Ceramic, 0.1 μ F 10WV	
C226	F1G1A104A014	Ceramic, 0.1 μ F 10WV	
C231	F1G1C103A033	Ceramic, 0.01 μ F 16WV	
C232	F1G1A104A014	Ceramic, 0.1 μ F 10WV	
C234	F1G1C103A033	Ceramic, 0.01 μ F 16WV	
C235	F1J0J106A014	Ceramic, 10 μ F 6.3WV	
C236	F1G1A104A014	Ceramic, 0.1 μ F 10WV	
C237	F1G1C223A033	Ceramic, 0.022 μ F 16WV	
C239	F1G1H470A058	Ceramic, 47PF 50WV	
C240	F1G1A104A014	Ceramic, 0.1 μ F 10WV	
C241	F1G1A104A014	Ceramic, 0.1 μ F 10WV	
C242	F1G1H102A401	Ceramic, 1000PF 50WV	
C243	F1G1A104A014	Ceramic, 0.1 μ F 10WV	
C244	YECUZ1H562KX	Ceramic, 5600PF 50WV	
C245	F1G1H102A401	Ceramic, 1000PF 50WV	
C246	F1G1H102A401	Ceramic, 1000PF 50WV	
C247	F1G1H102A401	Ceramic, 1000PF 50WV	
C248	F1G1H561A401	Ceramic, 560PF 50WV	
C249	F1G1H561A401	Ceramic, 560PF 50WV	
C250	F1G1A104A014	Ceramic, 0.1 μ F 10WV	
C251	F1G1H222A401	Ceramic, 2200PF 50WV	
C252	F1G1H471A401	Ceramic, 470PF 50WV	
C253	F1G1A104A014	Ceramic, 0.1 μ F 10WV	
C261	F1G1A104A014	Ceramic, 0.1 μ F 10WV	
C262	F1G1A104A014	Ceramic, 0.1 μ F 10WV	
C263	F1G1A104A014	Ceramic, 0.1 μ F 10WV	
C264	F1G1A104A014	Ceramic, 0.1 μ F 10WV	
C265	F1G1A104A014	Ceramic, 0.1 μ F 10WV	
C266	F1G1A104A014	Ceramic, 0.1 μ F 10WV	
C271	F1G1A104A014	Ceramic, 0.1 μ F 10WV	
C272	F1G1A104A014	Ceramic, 0.1 μ F 10WV	

Ref. No.	Part No.	Part Name & Description	Remarks
C275	F1G1A104A014	Ceramic, 0.1 μF 10WV	
C311	F1G1A104A014	Ceramic, 0.1 μF 10WV	
C312	F1H1H104A783	Ceramic, 0.1 μF 50WV	
C313	F1G1A104A014	Ceramic, 0.1 μF 10WV	
C314	F1H1H104A783	Ceramic, 0.1 μF 50WV	
C315	F1G1A104A014	Ceramic, 0.1 μF 10WV	
C316	F1G1A104A014	Ceramic, 0.1 μF 10WV	
C321	F1G1A104A014	Ceramic, 0.1 μF 10WV	
C322	F1H1H104A783	Ceramic, 0.1 μF 50WV	
C323	F1G1A104A014	Ceramic, 0.1 μF 10WV	
C324	F1G1A104A014	Ceramic, 0.1 μF 10WV	
C325	F1G1A104A014	Ceramic, 0.1 μF 10WV	
C401	F1G1H102A401	Ceramic, 1000PF 50WV	
C402	F1G1H102A401	Ceramic, 1000PF 50WV	
C403	F1G1H102A401	Ceramic, 1000PF 50WV	
C404	F1G1H102A401	Ceramic, 1000PF 50WV	
C405	F1G1A104A014	Ceramic, 0.1 μF 10WV	
C406	EEFCD0J470R	Electrolytic, 47 μF 6.3WV	
C411	F1H1H104A783	Ceramic, 0.1 μF 50WV	
C412	F1K1C1060001	Ceramic, 10 μF 16WV	
C413	F1H1A1050019	Ceramic, 1 μF 10WV	
C414	EEFCD0J470R	Electrolytic, 47 μF 6.3WV	
C421	F1H1H104A783	Ceramic, 0.1 μF 50WV	
C422	EEFCD0J470R	Electrolytic, 47 μF 6.3WV	
C423	F1G1A104A014	Ceramic, 0.1 μF 10WV	
C431	F1G1A104A014	Ceramic, 0.1 μF 10WV	
C432	F1G1A104A014	Ceramic, 0.1 μF 10WV	
C433	F1G1A104A014	Ceramic, 0.1 μF 10WV	
C441	F1G1A104A014	Ceramic, 0.1 μF 10WV	
C501	F1G1H101A410	Ceramic, 100PF 50WV	
C502	F1G1H101A410	Ceramic, 100PF 50WV	
C503	F1G1H101A410	Ceramic, 100PF 50WV	
C504	F1G1H101A410	Ceramic, 100PF 50WV	
C505	F1G1H101A410	Ceramic, 100PF 50WV	
C506	F1G1H101A410	Ceramic, 100PF 50WV	
C507	F1G1H101A410	Ceramic, 100PF 50WV	
C508	F1G1H101A410	Ceramic, 100PF 50WV	
C509	F1G1H101A410	Ceramic, 100PF 50WV	
C511	F1J0J106A014	Ceramic, 10 μF 6.3WV	
C512	F1J0J106A014	Ceramic, 10 μF 6.3WV	
C513	F1G1H101A410	Ceramic, 100PF 50WV	
C514	F1G1A104A014	Ceramic, 0.1 μF 10WV	
C515	F1G1H101A410	Ceramic, 100PF 50WV	

Ref. No.	Part No.	Part Name & Description	Remarks
C516	F1G1A104A014	Ceramic, 0.1 μ F 10WV	
C517	F1G1H101A410	Ceramic, 100PF 50WV	
C518	F1G1A104A014	Ceramic, 0.1 μ F 10WV	
C521	F1G1A104A014	Ceramic, 0.1 μ F 10WV	
C522	F1J0J106A014	Ceramic, 10 μ F 6.3WV	
C523	F1J0J106A014	Ceramic, 10 μ F 6.3WV	
C524	F1G1A104A014	Ceramic, 0.1 μ F 10WV	
C525	F1G1A104A014	Ceramic, 0.1 μ F 10WV	
C526	F1J0J106A014	Ceramic, 10 μ F 6.3WV	
C527	F1G1A104A014	Ceramic, 0.1 μ F 10WV	
C528	F1G1A104A014	Ceramic, 0.1 μ F 10WV	
C529	F1G1A104A014	Ceramic, 0.1 μ F 10WV	
C530	F1J0J106A014	Ceramic, 10 μ F 6.3WV	
C531	F1J0J106A014	Ceramic, 10 μ F 6.3WV	
C532	F1G1A104A014	Ceramic, 0.1 μ F 10WV	
C534	F1G1A104A014	Ceramic, 0.1 μ F 10WV	
C541	F1J0J106A014	Ceramic, 10 μ F 6.3WV	
C542	F1J0J106A014	Ceramic, 10 μ F 6.3WV	
C543	F1G1A104A014	Ceramic, 0.1 μ F 10WV	
C544	F1G1A104A014	Ceramic, 0.1 μ F 10WV	
C545	F1G1A104A014	Ceramic, 0.1 μ F 10WV	
C546	F1G1A104A014	Ceramic, 0.1 μ F 10WV	
C547	F1G1A104A014	Ceramic, 0.1 μ F 10WV	
C548	F1G1A104A014	Ceramic, 0.1 μ F 10WV	
C551	F1G1A104A014	Ceramic, 0.1 μ F 10WV	
C552	F1G1A104A014	Ceramic, 0.1 μ F 10WV	
C553	F1G1A104A014	Ceramic, 0.1 μ F 10WV	
C554	F1G1A104A014	Ceramic, 0.1 μ F 10WV	
C555	F1G1A104A014	Ceramic, 0.1 μ F 10WV	
C556	F1G1A104A014	Ceramic, 0.1 μ F 10WV	
C557	F1G1H101A410	Ceramic, 100PF 50WV	
C561	F1G1A104A014	Ceramic, 0.1 μ F 10WV	
C601	F1H1A1050019	Ceramic, 1 μ F 10WV	
C602	F1G1H101A410	Ceramic, 100PF 50WV	
C603	F1G1H101A410	Ceramic, 100PF 50WV	
C604	F1G1H101A410	Ceramic, 100PF 50WV	
C605	F1G1H101A410	Ceramic, 100PF 50WV	
C606	F1G1H101A410	Ceramic, 100PF 50WV	
C607	F1G1H101A410	Ceramic, 100PF 50WV	
C608	F1G1H101A410	Ceramic, 100PF 50WV	
C609	F1G1H101A410	Ceramic, 100PF 50WV	
C611	F1H1A1050019	Ceramic, 1 μ F 10WV	

Ref. No.	Part No.	Part Name & Description	Remarks
C612	F1G1H101A410	Ceramic, 100PF 50WV	
C613	F1G1H101A410	Ceramic, 100PF 50WV	
C614	F1G1H101A410	Ceramic, 100PF 50WV	
C616	F1G1H101A410	Ceramic, 100PF 50WV	
C621	F1G1A104A014	Ceramic, 0.1 μF 10WV	
C622	F1G1H101A410	Ceramic, 100PF 50WV	
C623	F1G1A104A014	Ceramic, 0.1 μF 10WV	
C631	F1G1A104A014	Ceramic, 0.1 μF 10WV	
C641	F1G1A104A014	Ceramic, 0.1 μF 10WV	
C651	F1G1A104A014	Ceramic, 0.1 μF 10WV	
C652	F1J0J106A014	Ceramic, 10 μF 6.3WV	
C653	F1G1A104A014	Ceramic, 0.1 μF 10WV	
C701	F1G1H331A495	Ceramic, 330PF 50WV	
C702	F1G1H331A495	Ceramic, 330PF 50WV	
C703	F1G1H121A410	Ceramic, 120PF 50WV	
C722	F1J0J106A014	Ceramic, 10 μF 6.3WV	
C723	F1G1A104A014	Ceramic, 0.1 μF 10WV	
L701	F1J1H471A703	Ceramic, 470PF 50WV	
L702	F1J1H471A703	Ceramic, 470PF 50WV	
RESISTORs			
R101	ERJ2GEJ123X	Chip, 12k Ω 1/16W	
R102	ERJ2GEJ123X	Chip, 12k Ω 1/16W	
R103	ERJ3RBD243V	Metal Glaze, 24k Ω 1/16W	
R104	ERJ2GEJ392X	Chip, 3.9k Ω 1/16W	
R106	ERJ2GEJ183X	Chip, 18k Ω 1/16W	
R107	ERJ2GEJ472X	Chip, 4.7k Ω 1/16W	
R110	ERJ2GEJ202X	Chip, 2k Ω 1/16W	
R121	ERJ2GEJ122X	Chip, 1.2k Ω 1/16W	
R131	ERJ2GEJ105X	Chip, 1M Ω 1/16W	
R132	ERJ2GEJ105X	Chip, 1M Ω 1/16W	
R141	ERJ2GEJ103X	Chip, 10k Ω 1/16W	
R142	ERJ2GEJ103X	Chip, 10k Ω 1/16W	
R151	ERJ2GEJ2R2X	Chip, 2.2 Ω 1/16W	
R152	ERJ12YJ200H	Chip, 20 Ω 1/2W	
R153	ERJ2GEJ2R2X	Chip, 2.2 Ω 1/16W	
R154	ERJ12YJ200H	Chip, 20 Ω 1/2W	
R155	ERJ2GEJ102X	Chip, 1k Ω 1/16W	
R156	ERJ2GEJ333X	Chip, 33k Ω 1/16W	
R157	ERJ2GEJ223X	Chip, 22k Ω 1/16W	
R201	ERJ2GEJ471X	Chip, 470 Ω 1/16W	
R202	ERJ2GEJ103X	Chip, 10k Ω 1/16W	
R203	ERJ2GEJ103X	Chip, 10k Ω 1/16W	
R212	ERJ2GEJ151X	Chip, 150 Ω 1/16W	
R214	ERJ2GEJ472X	Chip, 4.7k Ω 1/16W	

Ref. No.	Part No.	Part Name & Description	Remarks
R215	ERJ2GEJ472X	Chip, 4.7k Ω 1/16W	
R216	ERJ2GEJ273X	Chip, 27k Ω 1/16W	
R217	ERJ2GEJ273X	Chip, 27k Ω 1/16W	
R218	ERJ2GEJ103X	Chip, 10k Ω 1/16W	
R219	ERJ2GEJ332X	Chip, 3.3k Ω 1/16W	
R220	ERJ2GEJ332X	Chip, 3.3k Ω 1/16W	
R221	ERJ2GEJ105X	Chip, 1M Ω 1/16W	
R222	ERJ2GEJ471X	Chip, 470 Ω 1/16W	
R223	ERJ2GEJ393X	Chip, 39k Ω 1/16W	
R227	ERJ2GE0R00X	Chip, 0 Ω 1/16W	
R231	ERJ2GEJ102X	Chip, 1k Ω 1/16W	
R232	ERJ2GEJ153X	Chip, 15k Ω 1/16W	
R234	ERJ2GEJ105X	Chip, 1M Ω 1/16W	
R235	ERJ2GEJ562X	Chip, 5.6k Ω 1/16W	
R236	ERJ2GEJ562X	Chip, 5.6k Ω 1/16W	
R251	ERJ2GEJ103X	Chip, 10k Ω 1/16W	
R252	ERJ2GEJ473X	Chip, 47k Ω 1/16W	
R253	ERJ2GEJ103X	Chip, 10k Ω 1/16W	
R254	ERJ2GEJ103X	Chip, 10k Ω 1/16W	
R255	ERJ2GEJ103X	Chip, 10k Ω 1/16W	
R263	ERJ2GEJ270X	Chip, 27 Ω 1/16W	
R264	ERJ2GEJ220X	Chip, 22 Ω 1/16W	
R265	ERJ2GEJ220X	Chip, 22 Ω 1/16W	
R266	ERJ2GE0R00X	Chip, 0 Ω 1/16W	
R267	ERJ2GEJ103X	Chip, 10k Ω 1/16W	
R268	ERJ2GEJ102X	Chip, 1k Ω 1/16W	
R269	ERJ2GEJ103X	Chip, 10k Ω 1/16W	
R270	ERJ2GEJ393X	Chip, 39k Ω 1/16W	
R275	ERJ2GEJ220X	Chip, 22 Ω 1/16W	
R276	ERJ2GEJ220X	Chip, 22 Ω 1/16W	
R277	ERJ2GEJ220X	Chip, 22 Ω 1/16W	
R278	ERJ2GEJ220X	Chip, 22 Ω 1/16W	
R279	ERJ2GEJ220X	Chip, 22 Ω 1/16W	
R280	ERJ2GEJ220X	Chip, 22 Ω 1/16W	
R281	ERJ2GEJ220X	Chip, 22 Ω 1/16W	
R282	ERJ2GEJ220X	Chip, 22 Ω 1/16W	
R283	ERJ2GEJ220X	Chip, 22 Ω 1/16W	
R284	ERJ2GEJ220X	Chip, 22 Ω 1/16W	
R285	ERJ2GEJ220X	Chip, 22 Ω 1/16W	
R286	ERJ2GEJ220X	Chip, 22 Ω 1/16W	
R287	ERJ2GEJ220X	Chip, 22 Ω 1/16W	
R288	ERJ2GEJ220X	Chip, 22 Ω 1/16W	
R289	ERJ2GEJ220X	Chip, 22 Ω 1/16W	
R290	ERJ2GEJ220X	Chip, 22 Ω 1/16W	
R291	ERJ2GEJ393X	Chip, 39k Ω 1/16W	

Ref. No.	Part No.	Part Name & Description	Remarks
R292	ERJ2GEJ393X	Chip, 39k Ω 1/16W	
R293	ERJ2GEJ393X	Chip, 39k Ω 1/16W	
R294	ERJ2GEJ393X	Chip, 39k Ω 1/16W	
R295	ERJ2GEJ393X	Chip, 39k Ω 1/16W	
R296	ERJ2GEJ393X	Chip, 39k Ω 1/16W	
R297	ERJ2GEJ393X	Chip, 39k Ω 1/16W	
R298	ERJ2GEJ393X	Chip, 39k Ω 1/16W	
R301	ERJ2GEJ181X	Chip, 180 Ω 1/16W	
R302	ERJ2GEJ181X	Chip, 180 Ω 1/16W	
R303	ERJ2GEJ181X	Chip, 180 Ω 1/16W	
R311	ERJ2GEJ473X	Chip, 47k Ω 1/16W	
R312	ERJ2GEJ181X	Chip, 180 Ω 1/16W	
R313	ERJ2GEJ682X	Chip, 6.8k Ω 1/16W	
R314	ERJ2GEJ562X	Chip, 5.6k Ω 1/16W	
R315	ERJ2GEJ562X	Chip, 5.6k Ω 1/16W	
R316	ERJ2GEJ103X	Chip, 10k Ω 1/16W	
R317	ERJ2GEJ562X	Chip, 5.6k Ω 1/16W	
R321	ERJ2GEJ472X	Chip, 4.7k Ω 1/16W	
R322	ERJ2GEJ473X	Chip, 47k Ω 1/16W	
R323	ERJ8GEYJR51V	Chip, 0.51 Ω 1/8W	
R324	ERJ2GEJ101X	Chip, 100 Ω 1/16W	
R325	ERJ2GEJ101X	Chip, 100 Ω 1/16W	
R327	ERJ6GEY0R00V	Chip, 0 Ω 1/10W	
R431	ERJ2GEJ104X	Chip, 100k Ω 1/16W	
R441	ERJ2GEJ473X	Chip, 47k Ω 1/16W	
R501	ERJ2GEJ101X	Chip, 100 Ω 1/16W	
R511	ERJ2GEJ330X	Chip, 33 Ω 1/16W	
R512	ERJ2GEJ101X	Chip, 100 Ω 1/16W	
R513	ERJ2GEJ101X	Chip, 100 Ω 1/16W	
R514	ERJ2GEJ151X	Chip, 150 Ω 1/16W	
R515	ERJ2GEJ393X	Chip, 39k Ω 1/16W	
R516	ERJ2GEJ473X	Chip, 47k Ω 1/16W	
R517	ERJ2GEJ473X	Chip, 47k Ω 1/16W	
R518	ERJ2GEJ220X	Chip, 22 Ω 1/16W	
R519	ERJ2GEJ220X	Chip, 22 Ω 1/16W	
R521	ERJ2GEJ101X	Chip, 100 Ω 1/16W	
R522	ERJ2GEJ330X	Chip, 33 Ω 1/16W	
R523	ERJ8GEYJ100V	Chip, 10 Ω 1/8W	
R524	ERJ2GEJ330X	Chip, 33 Ω 1/16W	
R525	ERJ2GEJ330X	Chip, 33 Ω 1/16W	
R526	ERJ2GEJ151X	Chip, 150 Ω 1/16W	
R527	ERJ2RHD102X	Chip, 1k Ω 1/16W	
R528	ERJ6ENF75R0V	Chip, 75 Ω 1/10W	
R541	ERJ2GEJ332X	Chip, 3.3k Ω 1/16W	
R543	ERJ2GEJ471X	Chip, 470 Ω 1/16W	

Ref. No.	Part No.	Part Name & Description	Remarks
R552	ERJ2GEJ103X	Chip, 10k Ω 1/16W	
R553	ERJ2GEJ103X	Chip, 10k Ω 1/16W	
R554	ERJ2GEJ473X	Chip, 47k Ω 1/16W	
R555	ERJ2GEJ393X	Chip, 39k Ω 1/16W	
R556	ERJ2GEJ393X	Chip, 39k Ω 1/16W	
R557	ERJ2GEJ393X	Chip, 39k Ω 1/16W	
R570	ERJ2GEJ471X	Chip, 470 Ω 1/16W	
R571	ERJ2GEJ471X	Chip, 470 Ω 1/16W	
R572	ERJ2GEJ471X	Chip, 470 Ω 1/16W	
R573	ERJ2GEJ471X	Chip, 470 Ω 1/16W	
R574	ERJ2GEJ471X	Chip, 470 Ω 1/16W	
R575	ERJ2GEJ471X	Chip, 470 Ω 1/16W	
R576	ERJ2GEJ471X	Chip, 470 Ω 1/16W	
R577	ERJ2GEJ471X	Chip, 470 Ω 1/16W	
R621	ERJ2GEJ151X	Chip, 150 Ω 1/16W	
R623	ERJ2GEJ103X	Chip, 10k Ω 1/16W	
R631	ERJ2GEJ750X	Chip, 75 Ω 1/16W	
R651	ERJ2GEJ473X	Chip, 47k Ω 1/16W	
R701	ERJ2GEJ101X	Chip, 100 Ω 1/16W	
R702	ERJ2GEJ101X	Chip, 100 Ω 1/16W	
R703	ERJ2GEJ101X	Chip, 100 Ω 1/16W	
R704	ERJ2GE0R00X	Chip, 0 Ω 1/16W	
R705	ERJ2GE0R00X	Chip, 0 Ω 1/16W	
R706	ERJ2GE0R00X	Chip, 0 Ω 1/16W	
R707	ERJ2GEJ101X	Chip, 100 Ω 1/16W	
R708	ERJ2GEJ101X	Chip, 100 Ω 1/16W	
R709	ERJ2GEJ221X	Chip, 220 Ω 1/16W	
R711	ERJ3GEY0R00V	Chip, 0 Ω 1/16W	
R712	ERJ3GEY0R00V	Chip, 0 Ω 1/16W	
R713	ERJ2GEJ221X	Chip, 220 Ω 1/16W	
R714	ERJ2GEJ221X	Chip, 220 Ω 1/16W	
R715	ERJ2GEJ221X	Chip, 220 Ω 1/16W	
R716	ERJ2GEJ221X	Chip, 220 Ω 1/16W	
R717	ERJ2GEJ101X	Chip, 100 Ω 1/16W	
R718	ERJ2GEJ101X	Chip, 100 Ω 1/16W	
R721	ERJ2GEJ101X	Chip, 100 Ω 1/16W	
R722	ERJ2GEJ101X	Chip, 100 Ω 1/16W	
R723	ERJ2GEJ101X	Chip, 100 Ω 1/16W	
R724	ERJ2GEJ101X	Chip, 100 Ω 1/16W	
R725	ERJ2GEJ101X	Chip, 100 Ω 1/16W	
CONNECTORs			
CN101	YEAE5243530	Connector, 30P	
CN201	K1MN40B00022	Connector, 40P	
CN301	K1MN04B00014	Connector, 4P	

Ref. No.	Part No.	Part Name & Description	Remarks
CN302	YEAE5326102	Connector, 2P	
CN303	YEAE012086	Connector, 20P	
CN401	YEAE5274512	Connector, 12P	
CN701	YEAE5243530	Connector, 30P	
COILs			
L101	J0JCC0000152	Coil	
L102	J0JCC0000152	Coil	
L201	J0JCC0000152	Coil	
L401	YELTBMHS800T	Coil	
L403	YELTBMHS800T	Coil	
L404	YELTBMHS800T	Coil	
L406	YELTBMHS800T	Coil	
L511	J0JCC0000042	Coil	
L513	J0JCC0000152	Coil	
L514	J0JCC0000152	Coil	
L515	J0JCC0000152	Coil	
L516	J0JCC0000152	Coil	
L541	J0JCC0000152	Coil	
L705	G1C2R2K00001	Coil	
L721	YELTBLM2A102	Coil	
L722	YELTBLM2A102	Coil	
L723	YELTBLM2A102	Coil	
L724	YELTBLM2A102	Coil	
SWITCH			
SW301	K0L1BA000023	Switch	
CRYSTALs			
XL201	H0J168500003	Crystal Oscillator	
XL501	H1A2705B0025	Crystal Oscillator	
NETWORK RESISTORs			
R261	D1H810340005	Network Resistor	
R262	D1H839340001	Network Resistor	
R271	D1H810340005	Network Resistor	
R272	D1H882040001	Network Resistor	
R273	D1H882040001	Network Resistor	
R274	D1H839340001	Network Resistor	
FILTERs			
L512	J0MAB0000134	Filter	
L703	J0MAB0000015	Filter	
L704	J0MAB0000015	Filter	
Mechanical Parts			
MISCELLANEOUS			
1	YGP0FX5620	Deck Mechanism Ass'y	
2	YGP0FX5560	Suspension Ass'y	

Ref. No.	Part No.	Part Name & Description	Remarks
26	YGFA012013	Upper Chassis	
27	YGAP2820	Sensor FPC Ass'y	
32	YGFX0052654	Earth Spring	
33	YGFX0462197	Suspension Lock Lever (L)	
35	YGFX0052630	Suspension Spring	
36	YGFS04858	Damper	
37	YGP0FX4803	Loading Motor Ass'y	
38	K1LB02A00093	Connector w/Lead Wire	
39	YGFX0031172	Lock Gear (1)	
40	YGFX0031173	Lock Gear (2)	
41	YGFW062772	Loading Gear Shaft	
42	YGFX0031166	Laoding Gear (1)	
43	YGFX0031167	Laoding Gear (2)	
44	YGFX0031168	Laoding Gear (3)	
45	YGFX0031169	Laoding Gear (4)	
46	YGFX0031170	Laoding Gear (5)	
47	YGFX0031171	Laoding Gear (6)	
48	YGFX0052632	Worm Gear Housing Spring	
49	YGFX0031178	Clamp Rack	
50	YGFX0052633	Clamp Rack Spring	
51	YGFX0462195B	Slide Lever	
52	YGFX0052711	Suspension Spring (F)	
53	YGFX0052634	Slide Lever Spring	
54	YGFX0052631	Offset Spring	
55	YGFA012014B	Main Chassis	
56	YGFX0462196	Suspension Lock Lever (R)	
57	YGFX0052635	Suspension Lock Lever L Spring	
64	YGFX0052668	Feeder Spring (L)	
65	YGFX0052669A	Feeder Spring (R)	
66	YGFX0052639	Upper Spring	
71	YGP0FX5611	Feeder Arm Ass'y	
72	YGP0PT9453A0	Servo PCB w/Component	RTL
81	YGJS06292	Screw	
82	YEJT03152	Screw	
83	YGJT01101	Screw	

17. EXPLODED VIEW [DVD Deck]

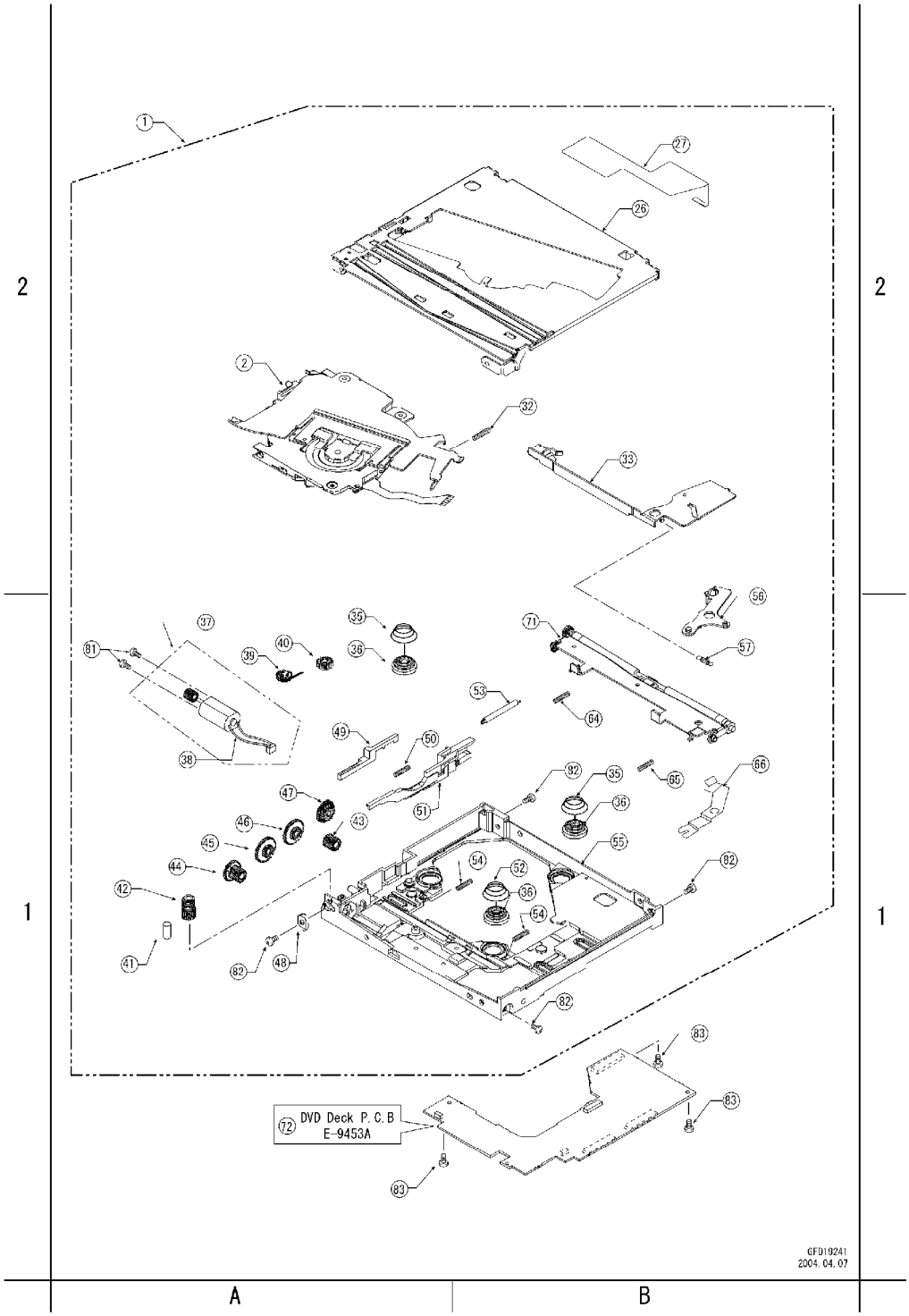

18. PACKING PARTS LIST

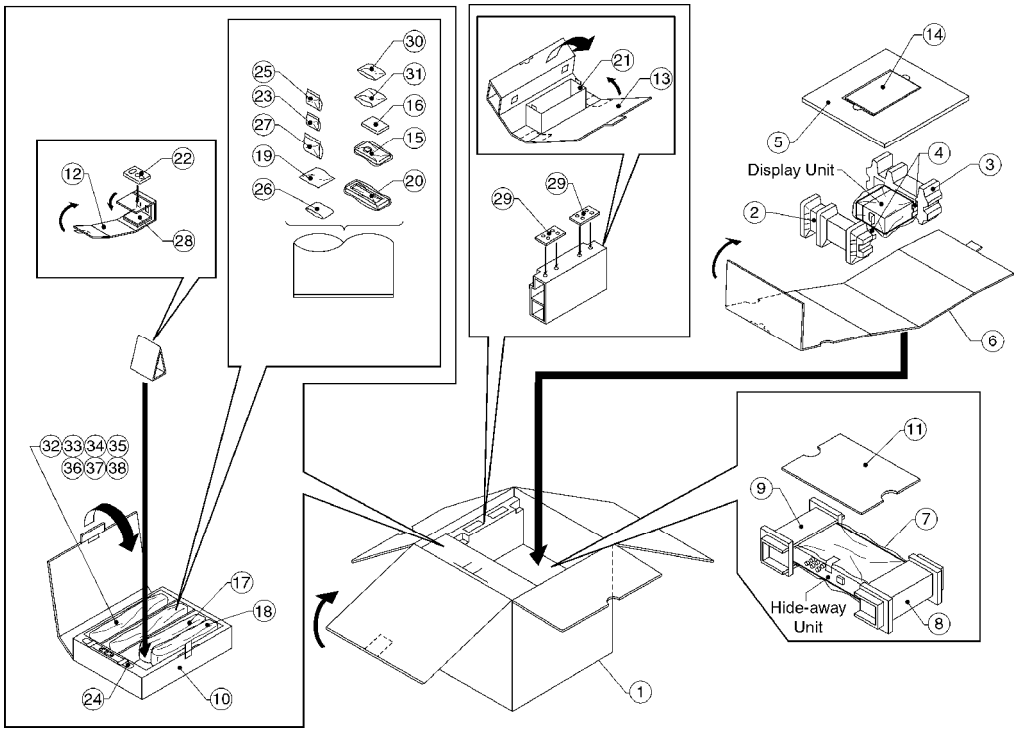

Item numbers listed below should not order reqgular spare parts. / (not available)

Item No.	Parts No.	Parts Name & Description	Q'ty	Remarks
1	-	Inner Carton	1	Not available
2	-	Packing Pad, Display Unit (R)	1	Not available
3	-	Packing Pad, Display Unit (L)	1	Not available
4	-	Packing Pad, (A)	1	Not available
5	-	Packing Pad, (B)	1	Not available
6	-	Packing Pad, (C)	1	Not available
7	-	Packing Pad, (D)	1	Not available
8	-	Packing Pad, Hide-away Unit (R)	1	Not available
9	-	Packing Pad, Hide-away Unit (L)	1	Not available
10	-	Packing Pad, (E)	1	Not available
11	-	Packing Pad, (F)	1	Not available
12	-	Packing Pad, (G)	1	Not available

Item No.	Parts No.	Parts Name & Description	Q'ty	Remarks
13	-	Packing Pad, (H)	1	Not available
14	-	Operating Instructions Kit	(1)	Not available
	YEFM284237	Operating Instructions	(1)	
	YEFM293264	Installation Instructions	(1)	
	-	Warranty Card for USA	(1)	Not available
	-	Warranty Card for Canada	(1)	Not available
	-	Service center List for USA	(1)	Not available
	-	Caution Label (English)	(1)	Not available
15	YEFX9995145	Remote Control Unit	1	
16	CR2025/1F	Lithium Battery	1	
17	YEAA12692A	TV Antenna (R)	1 set	
18	YEAA12693A	TV Antenna (L)		
19	YEFX9991793	Wiping Cloth	1	
20	YEP9FZ2739	Trim Plate	1	
21	YEFG012694	Mounting Collar	1	
22	YEFX0052714	Mounting Spring	2	
23	YEP9FZ2714	Accessory Part or Tool (Bolt Tapping Nut)	1	
24	YEFG04019	Rear Support Strap	1	
25	YEP9BS1206	Screw Kit (Round Head Flat-Head Round Head)	1	
26	YEP9FZ2761	Spacer Double-Faced Adhesive Tape (for spacer)	1	
27	YEP9BS1194	Screw Kit (Round Head Tapping Nut)	1	
28	YEFG021010A	Mounting Bracket	2	
29	YEFG012424	Base Bracket	2	
30	YEP9FZ3042	Double-Faced Adhesive Tape (for hide-away unit) Velcro Tape	1	

Item No.	Parts No.	Parts Name & Description	Q'ty	Remarks
31	YEP9FZ3041	Antenna Clamp Cord Clamp (for antenna)	1	
32	YEAJ012002	Power Connector (for display unit), Reverse Extension Cord (for rear view camera), Clip Connector	1	
33	YEAJ071659	Display Unit / Hide-away Unit Connecting Cord	1	
34	YEAJ012003	Power Connector (for hide-away unit)	1	
35	YEAJ09271	Ground Lead	1	
36	YEAA09141	Radio Antenna Extension Cord	1	
37	YEAJ071463	Center Speaker Lead , Center Speaker Extension Lead	1	
38	K1HB12FC0002	Audio Cable	1	

19. WIRING DIAGRAM

19.1. Display/SW Block

19.2. Main Block (Top View)

19.3. Main Block (Bottom View)

19.4. TFT Block (Top View)

19.5. TFT Block (Bottom View)

19.6. Radio Block (Top View)

19.7. Radio Block (Bottm View)

19.8. TV Block (Top View)

19.9. TV Block (Bottom View)

19.10. D-AMP Block (Top View)

19.11. D-AMP Block (Bottom View)
19.12. DVD Servo Block (Top View)
19.13. DVD Servo Block (Bottom View)
20. SCHEMATIC DIAGRAM -1
20.1. Switch Block
21. SCHEMATIC DIAGRAM -2
21.1. Main-1 Block
21.2. Main-2 Block
21.3. Main-3 Block
21.4. Main-4 Block
21.5. Main-5 Block
21.6. TFT Block
21.7. Display Block
21.8. Radio-1 Block
21.9. Radio-2 Block
21.10. TV Block
21.11. D-AMP Block
21.12. DVD Servo-1 Block
21.13. DVD Servo-2 Block
22. SCHEMATIC DIAGRAM for Printing with Letter Size
22.1. Main-1 Block (Left Side)
22.2. Main-1 Block (Right Side)
22.3. Main-2 Block (Left Side)
22.4. Main-2 Block (Right Side)

22.5. Main-3 Block (Left Side)
22.6. Main-3 Block (Right Side)
22.7. Main-4 Block (Left Side)
22.8. Main-4 Block (Right Side)
22.9. Main-5 Block (Left Side)
22.10. Main-5 Block (Right Side)
22.11. TFT Block (Left Side)
22.12. TFT Block (Right Side)
22.13. Display Block (Left Side)
22.14. Display Block (Right Side)
22.15. Radio-1 Block (Left Side)
22.16. Radio-1 Block (Right Side)
22.17. Radio-2 Block (Left Side)
22.18. Radio-2 Block (Right Side)
22.19. TV Block (Left Side)
22.20. TV Block (Right Side)
22.21. D-AMP Block (Left Side)
22.22. D-AMP Block (Right Side)
22.23. DVD Servo-1 Block (Left Side)
22.24. DVD Servo-1 Block (Right Side)
22.25. DVD Servo-2 Block (Left Side)
22.26. DVD Servo-2 Block (Right Side)

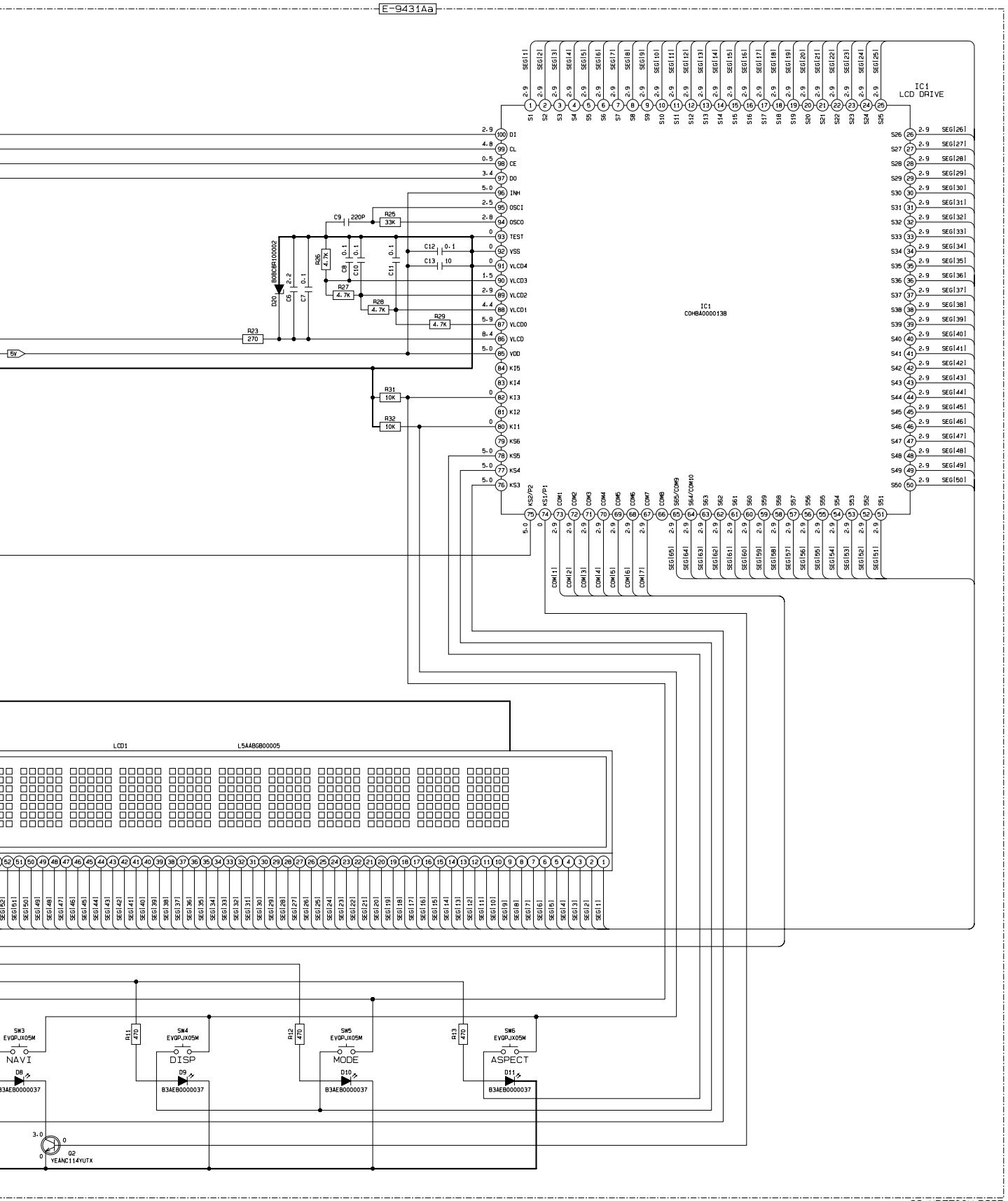
E-9431Aa
IC1
LCD DRIVE
IC1
COHBA0000138
LCD1
L5AABGB00005
SW3
EVQPJX05M
NAVI
SW4
EVQPJX05M
DISP
SW5
EVQPJX05M
MODE
SW6
EVQPJX05M
ASPECT
B3AEB0000037
Q2
YEANC114YUTX
6V

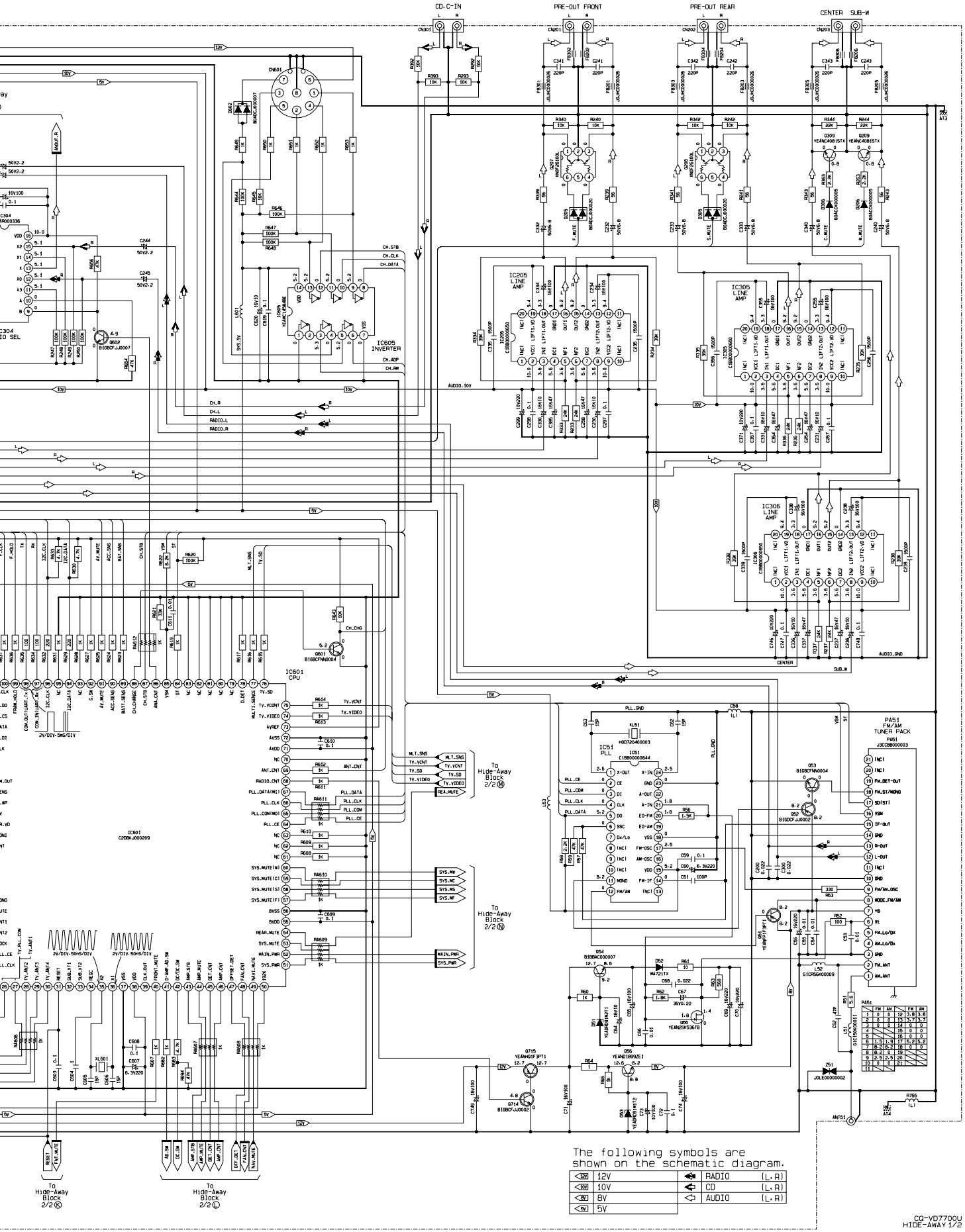

CQ-VD7700U
HIDE-AWAY 1/2

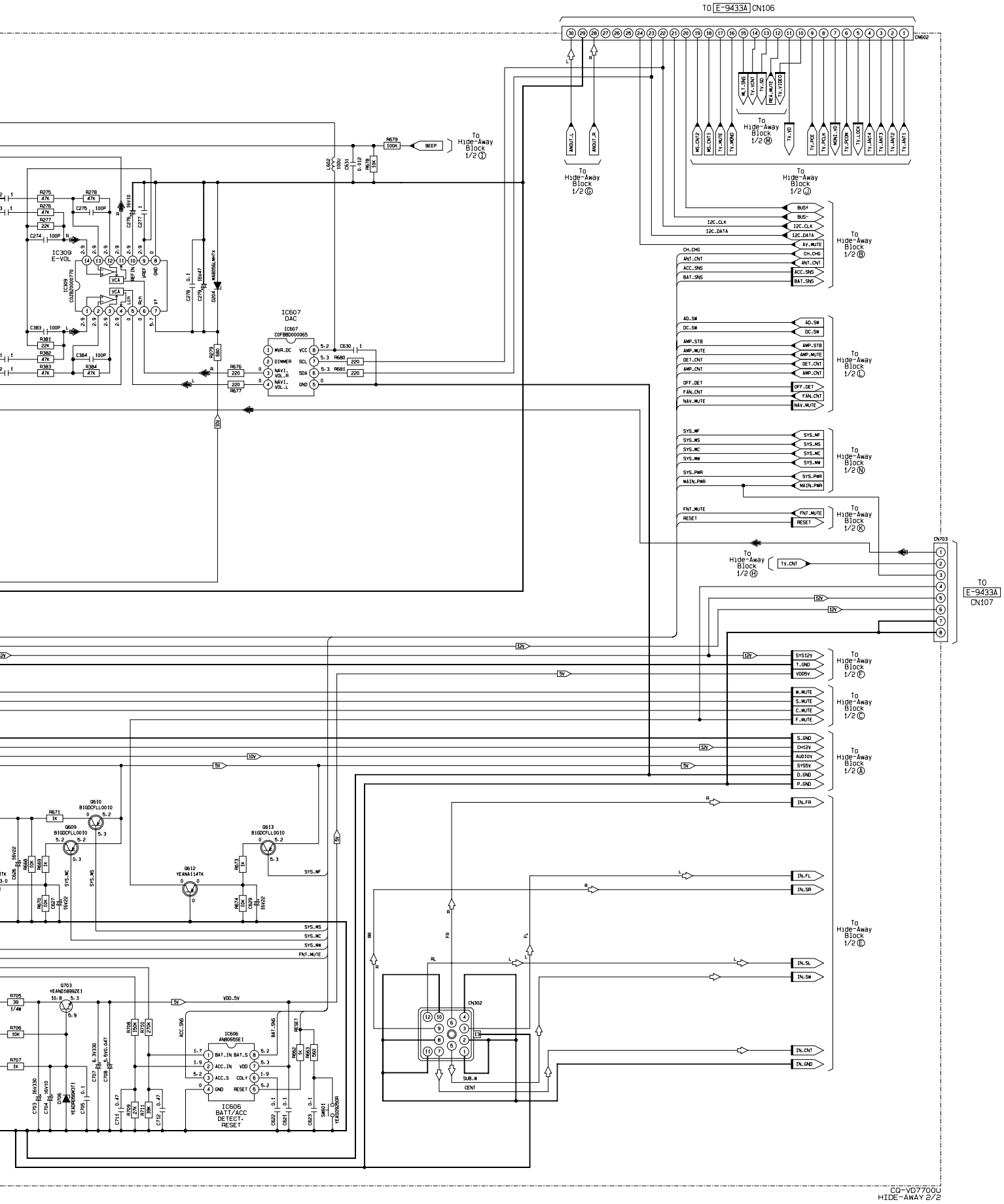
TO E-9433A CN106
CN602
To Hide-Away Block 1/2 Ⓖ
To Hide-Away Block 1/2 Ⓜ
To Hide-Away Block 1/2 Ⓙ
To Hide-Away Block 1/2 Ⓘ
To Hide-Away Block 1/2 Ⓑ
To Hide-Away Block 1/2 Ⓛ
To Hide-Away Block 1/2 Ⓝ
To Hide-Away Block 1/2 Ⓚ
To Hide-Away Block 1/2 Ⓗ
CN703
TO E-9433A CN107
To Hide-Away Block 1/2 Ⓕ
To Hide-Away Block 1/2 Ⓒ
To Hide-Away Block 1/2 Ⓐ
To Hide-Away Block 1/2 Ⓔ
IC309 E-VOL
IC607 DAC
IC606 BATT/ACC DETECT. RESET
CN302
BEEP
AMOUT-L
AMOUT-R
BUS+
BUS-
I2C.CLK
I2C.DATA
AV.MUTE
CH.CHG
ANT.CNT
ACC.SNS
BAT.SNS
AD.SW
DC.SW
AMP.STB
AMP.MUTE
DET.CNT
AMP.CNT
OFF.DET
FAN.CNT
NAV.MUTE
SYS.MF
SYS.MS
SYS.MC
SYS.MW
SYS.PWR
MAIN.PWR
FNT.MUTE
RESET
TV.CNT
SYS12V
T.GND
VDD5V
W.MUTE
S.MUTE
C.MUTE
F.MUTE
S.GND
CH12V
AUDIO9V
SYS5V
D.GND
P.GND
IN.FR
IN.FL
IN.SR
IN.SL
IN.SW
IN.CNT
IN.GND
SUB.W
CENT
CQ-VD7700U
HIDE-AWAY 2/2

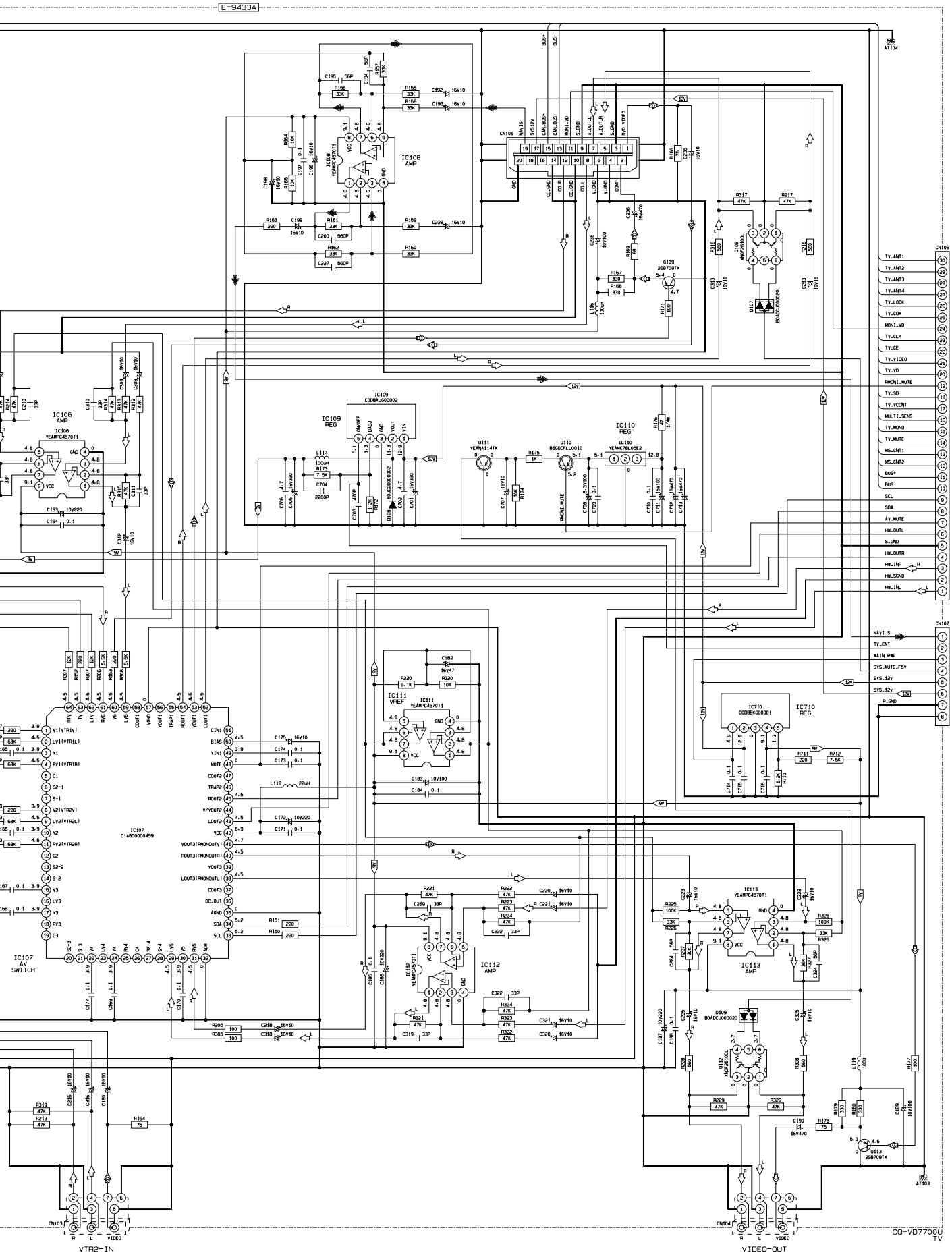
E-9433A
IC108 AMP
IC106 AMP
IC109 REG
IC110 REG
IC111 VREF
IC112 AMP
IC113 AMP
IC107 AV SWITCH
IC710 REG
CN105
CN106
CN107
CN103
CN104
TO E-6995B CN602
TO E-6995B CN703
VTR2-IN
VIDEO-OUT
CQ-VD7700U
TV

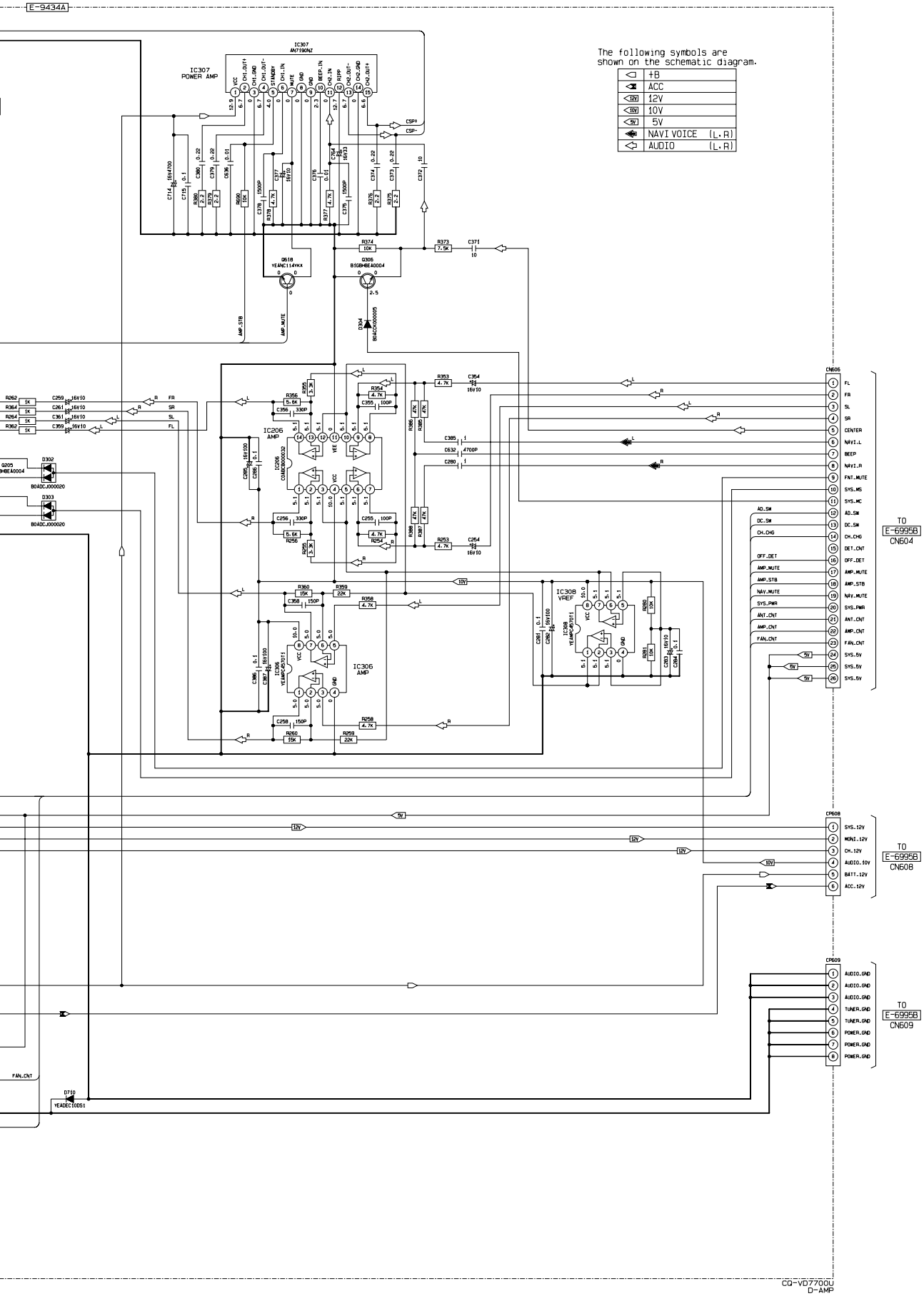

The following symbols are shown on the schematic diagram.

	+B
	ACC
12V	12V
10V	10V
5V	5V
	NAVI VOICE (L.R)
	AUDIO (L.R)

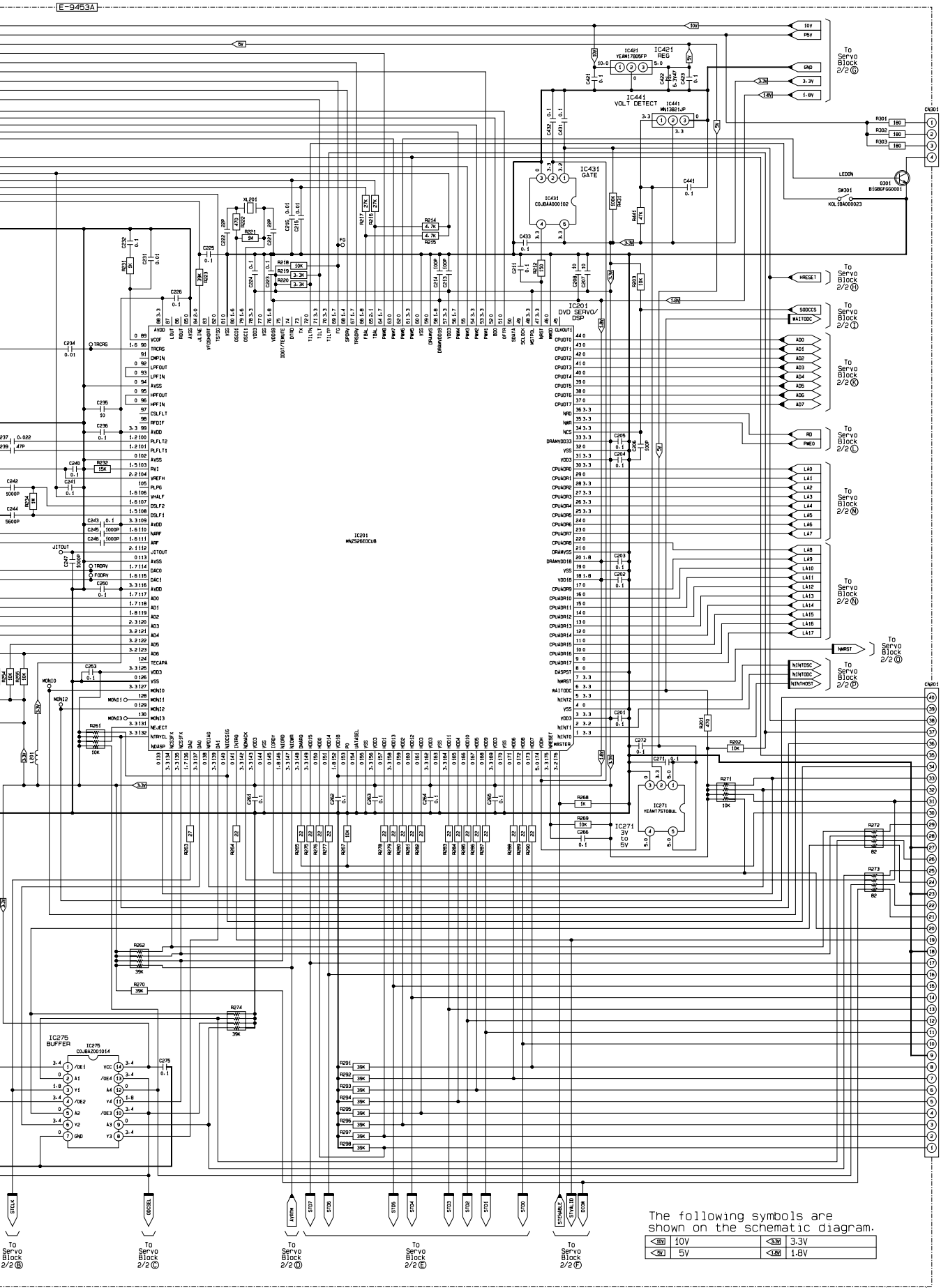
E-9453A
IC201
MN2S26EDCUB
IC204
DVD SERVO/
DSP
IC421
YEAM1805FP
REG
IC441
VOLT DETECT
IC441
MM3801LP
IC431
GATE
IC431
CDJBAA000102
IC271
YEAM75T08UL
IC275
BUFFER
IC275
CDJBAZ001014
XL201
To
Servo
Block
2/2Ⓖ
To
Servo
Block
2/2Ⓗ
To
Servo
Block
2/2Ⓘ
To
Servo
Block
2/2Ⓚ
To
Servo
Block
2/2Ⓛ
To
Servo
Block
2/2Ⓜ
To
Servo
Block
2/2Ⓝ
To
Servo
Block
2/2Ⓞ
To
Servo
Block
2/2Ⓟ
To
Servo
Block
2/2Ⓑ
To
Servo
Block
2/2Ⓒ
To
Servo
Block
2/2Ⓓ
To
Servo
Block
2/2Ⓔ
To
Servo
Block
2/2Ⓕ
The following symbols are
shown on the schematic diagram.
10V
10V
5V
5V
3.3V
3.3V
1.8V
1.8V
GFD19241 SERVO 1/2

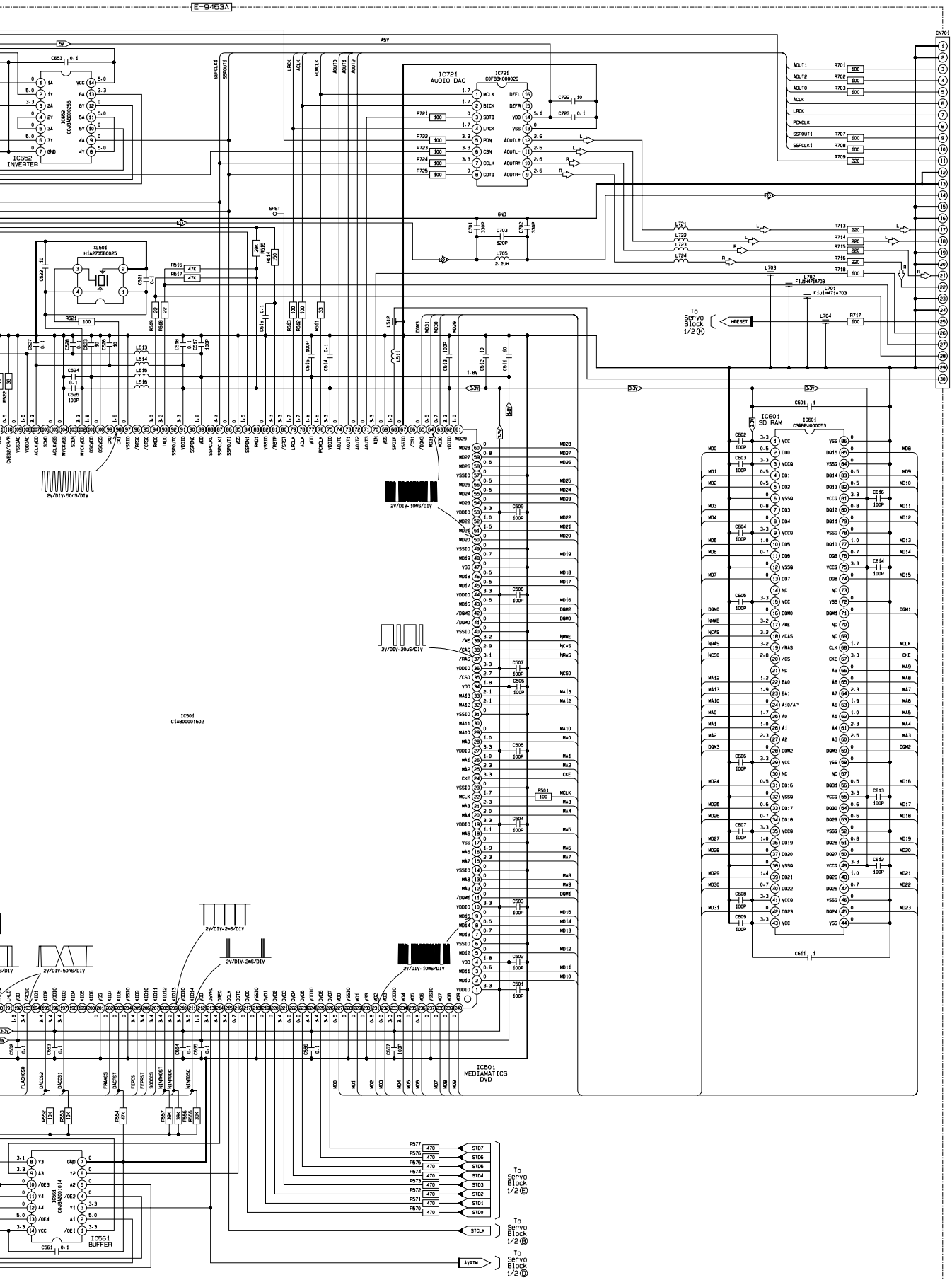

GFD19241 SERVO 2/2

Printed in Japan (K) 2004. 4 (Recycled Paper)

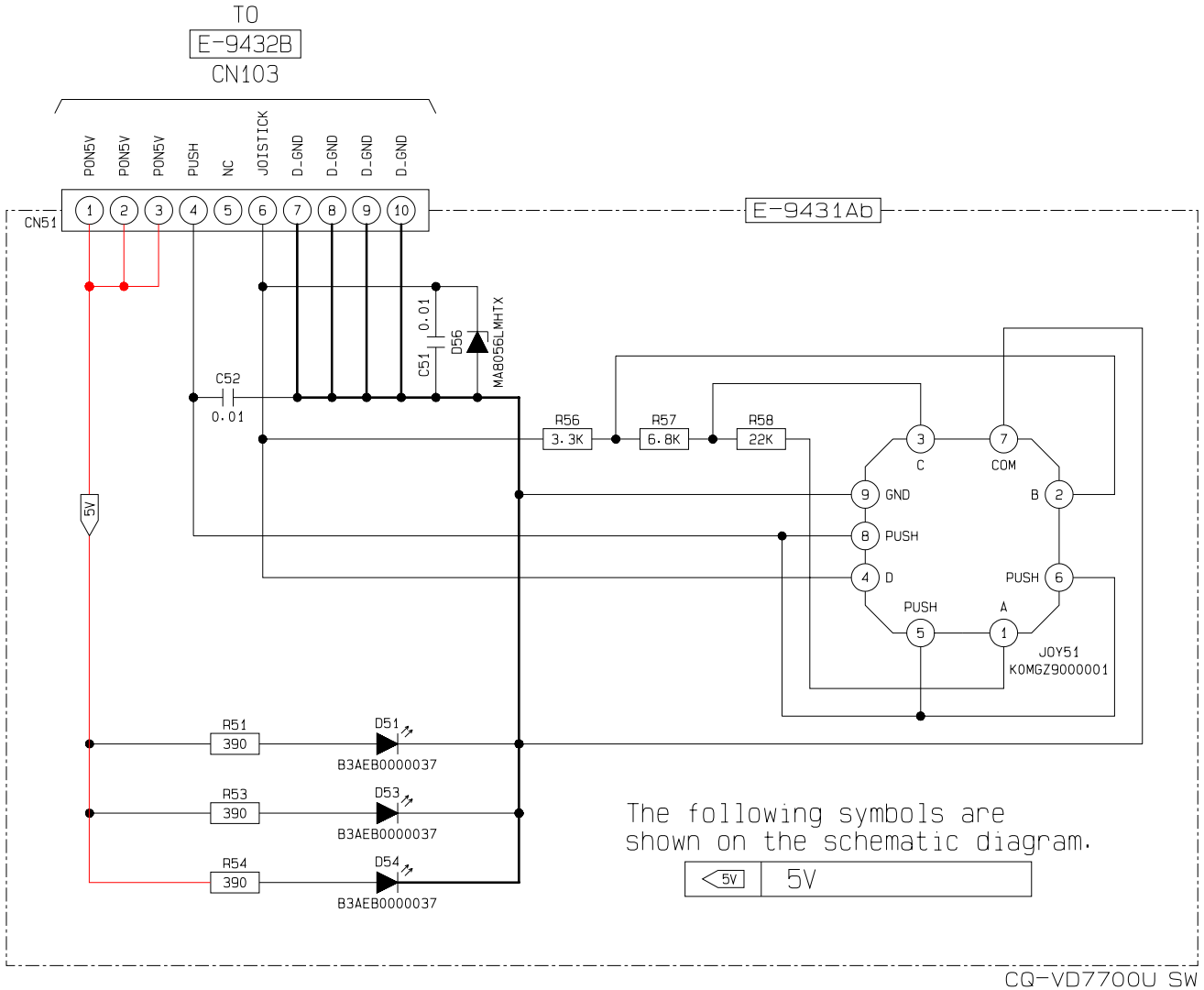

CQ-VD7700U SW

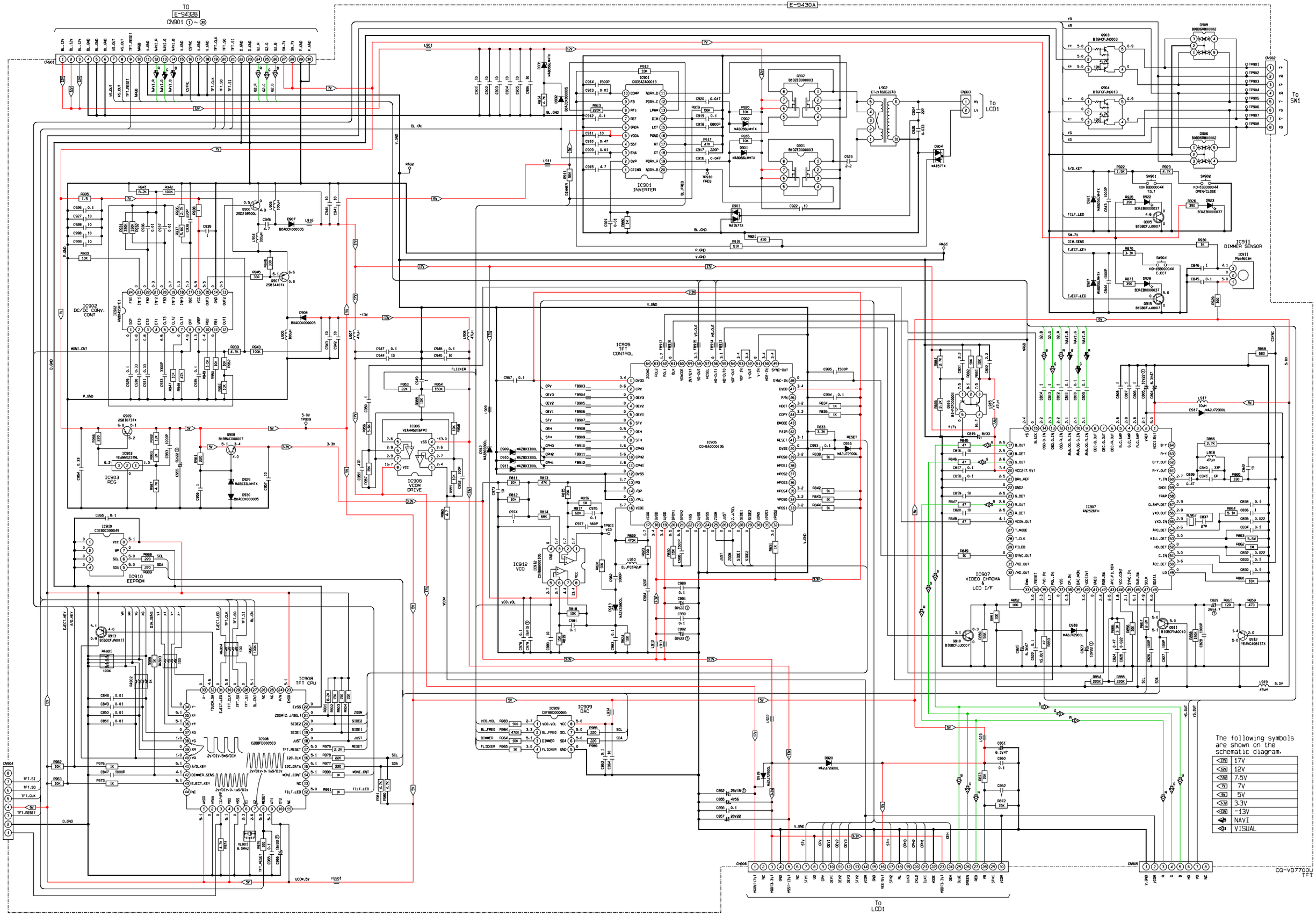
E-9430A
TO E-9432B CN901 ①~㉚
CN901
IC901 INVERTER
IC902 DC/DC CONV. CONT
IC903 REG
IC905 TFT CONTROL
IC906 VCOM DRIVE
IC907 VIDEO CHROMA & LCD I/F
IC908 TFT CPU
IC909 DAC
IC910 EEPROM
IC911 DIMMER SENSOR
IC912 VCO
To LCD1
To SW1
CN902
CN903
CN904
CN905
SW901 TILT
SW902 OPEN/CLOSE
SW904 EJECT
The following symbols are shown on the schematic diagram.
17V
12V
7.5V
7V
5V
3.3V
-13V
NAVI
VISUAL
CQ-VD7700U
TFT

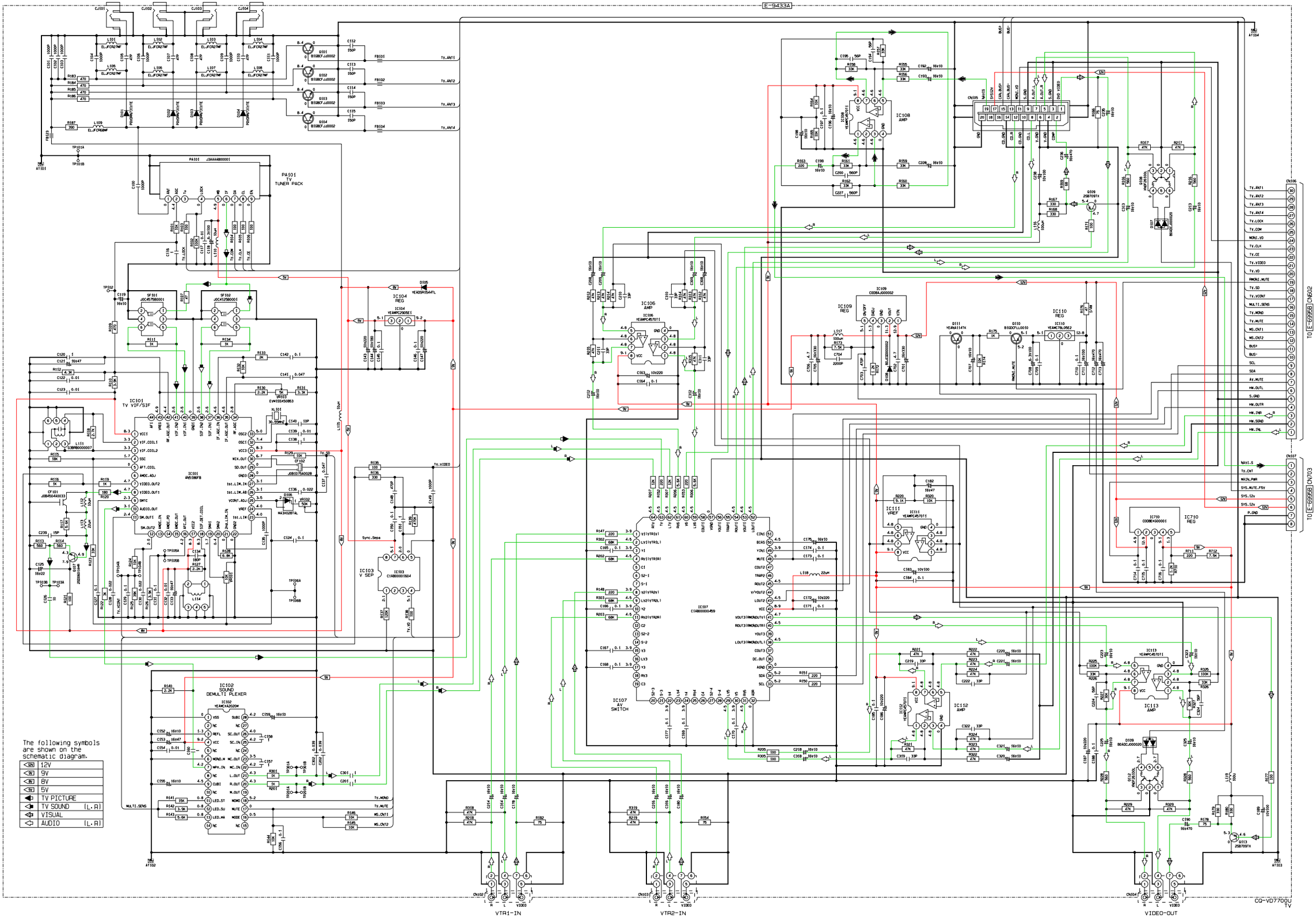

The following symbols are shown on the schematic diagram.

12V	12V
9V	9V
8V	8V
5V	5V
	TV PICTURE
	TV SOUND (L.R)
	VISUAL
	AUDIO (L.R)

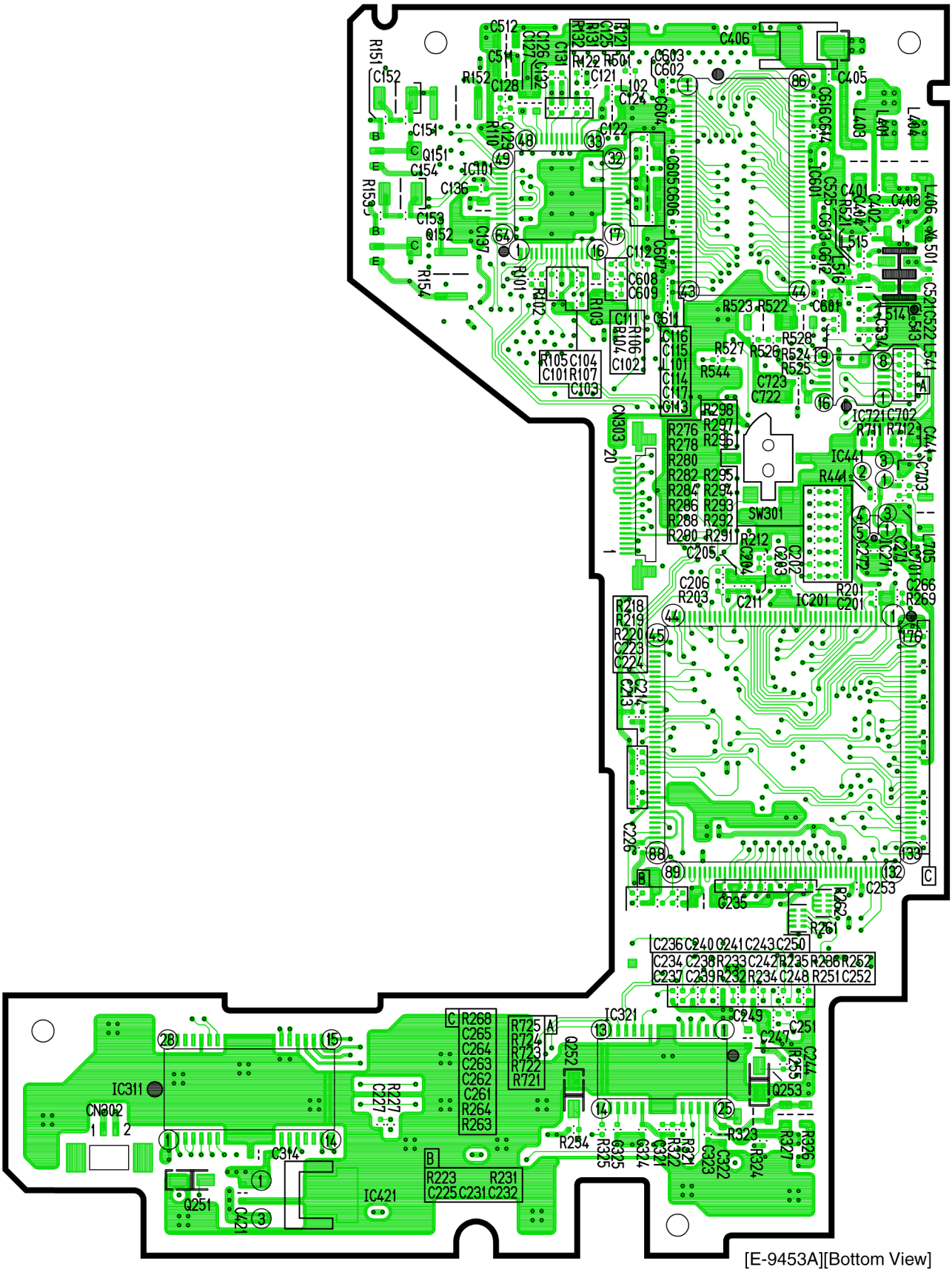

[E-9453A][Bottom View]

YGFD19241 Servo P.C.B

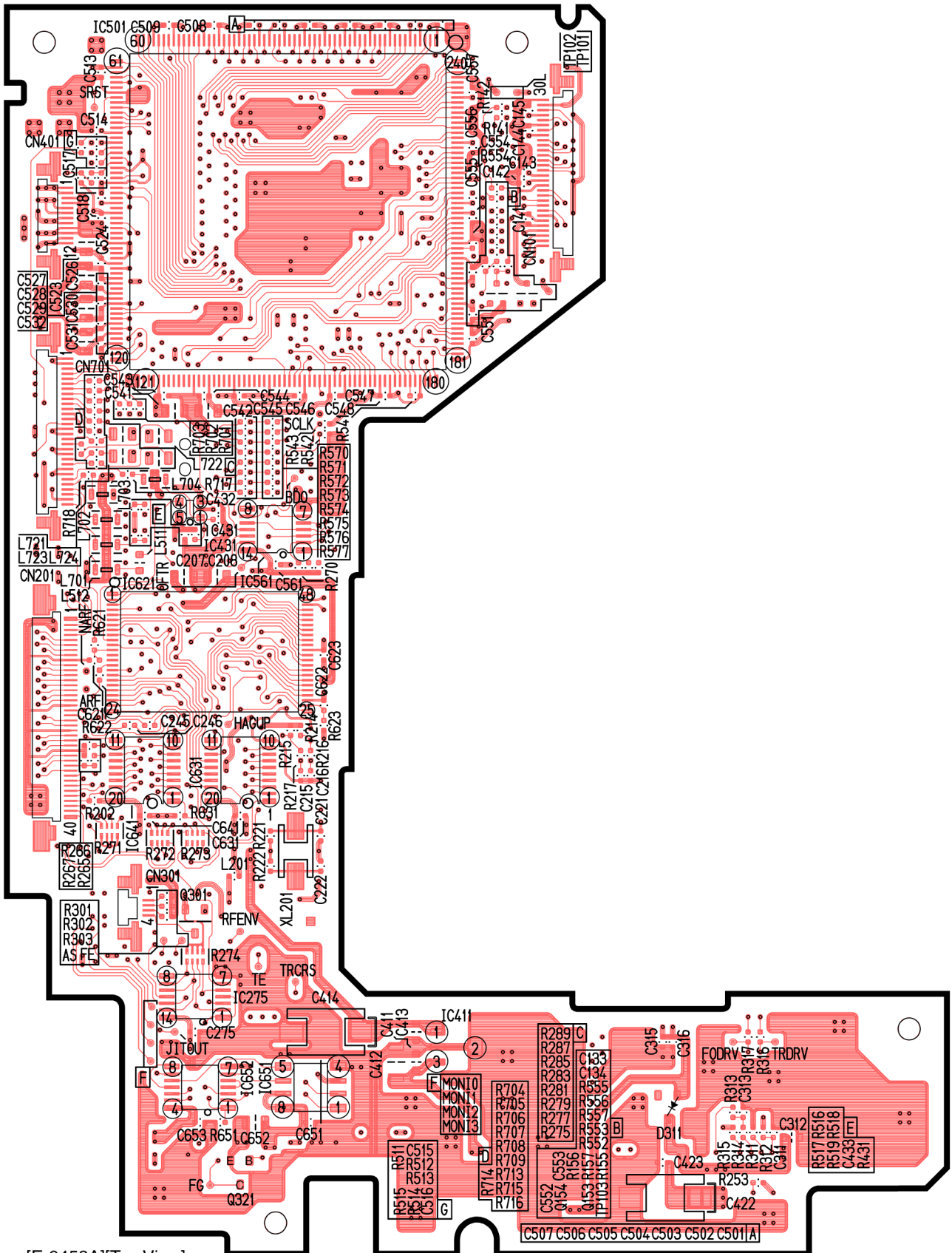

[E-9453A][Top View]

YGFD19241 Servo P.C.B

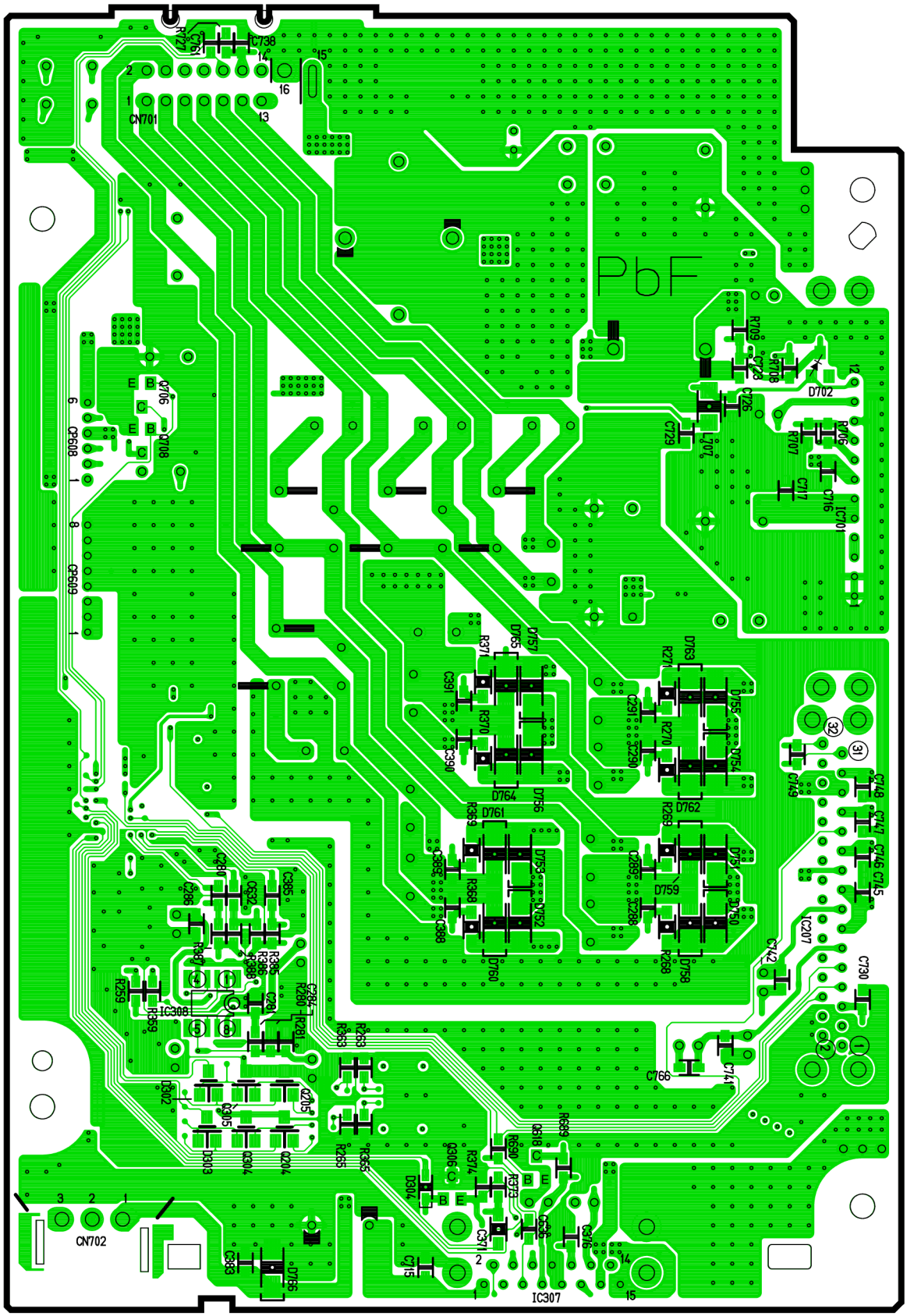

[E-9434A][Bottom View]

CQ-VD7700U D-AMP P.C.B

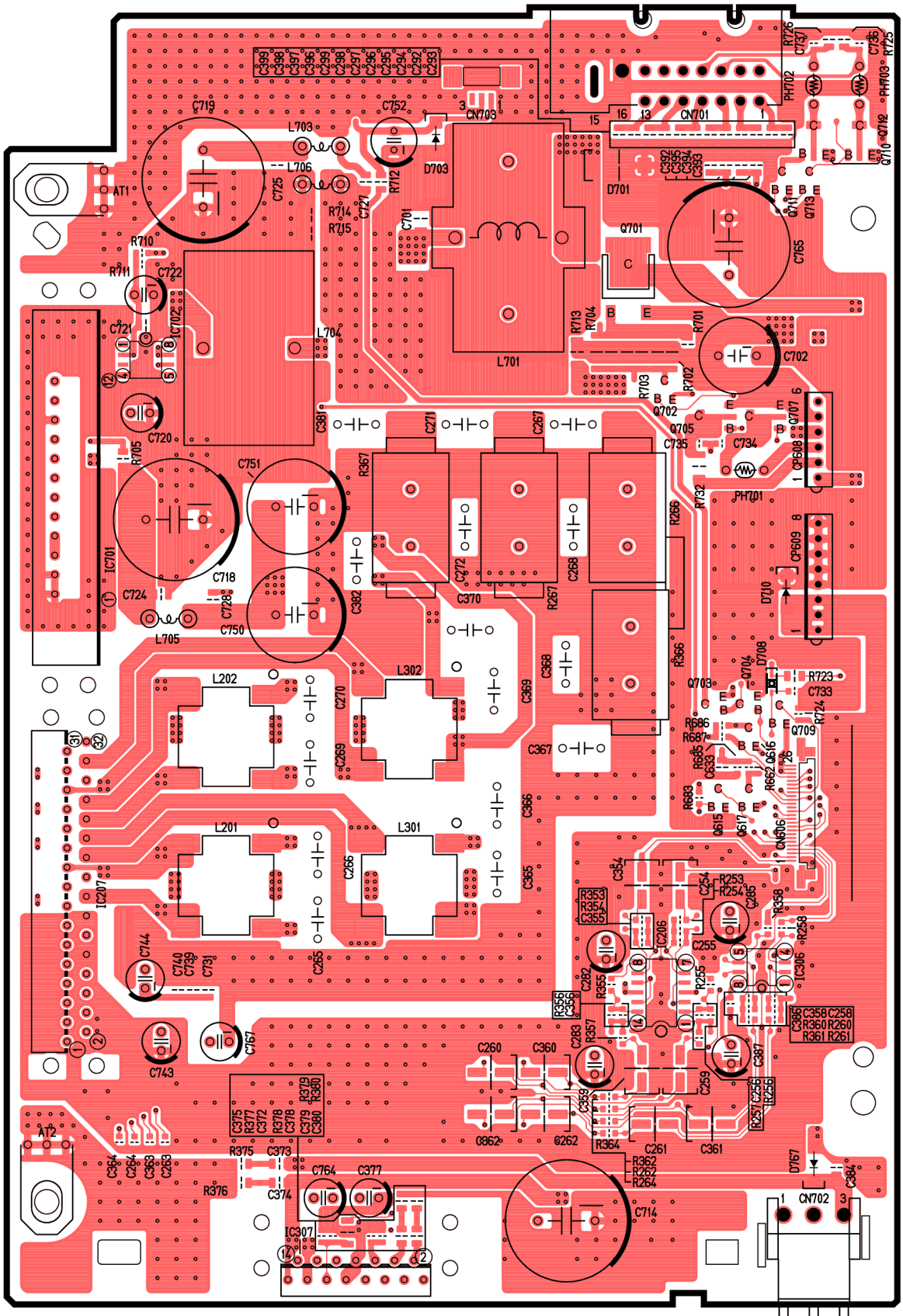

[E-9434A][Top View]

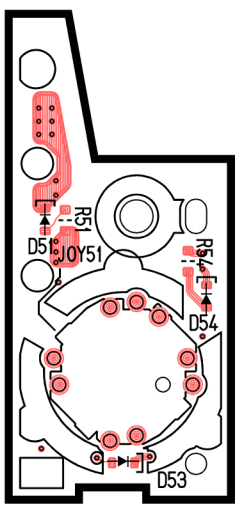

[E-9431Ab][Top View]

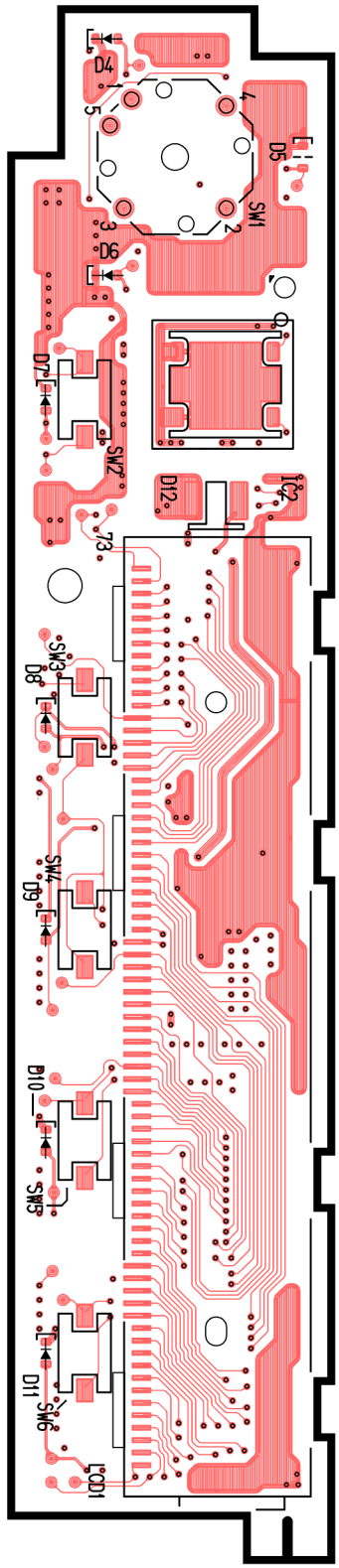

[E-9431Aa][Top View]

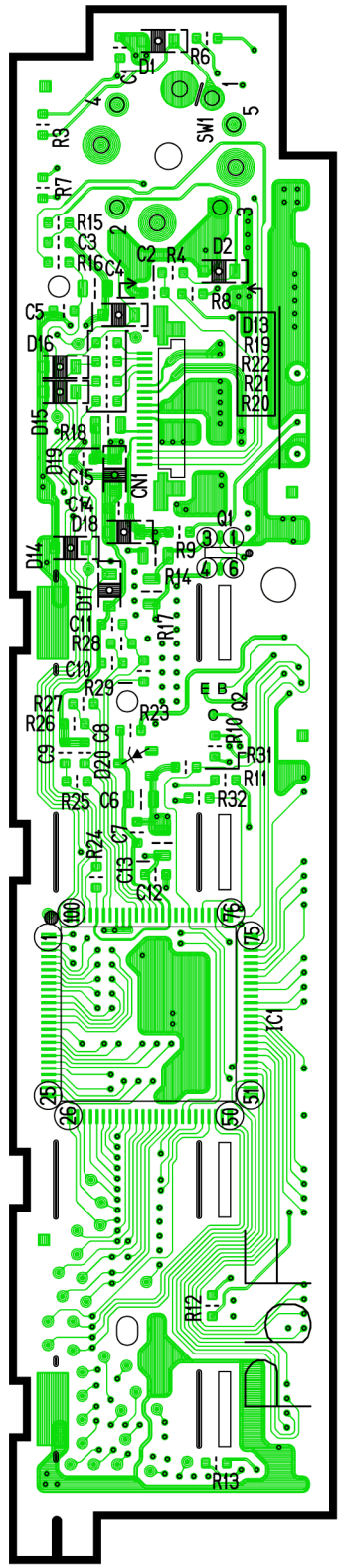

[E-9431Aa][Bottom View]

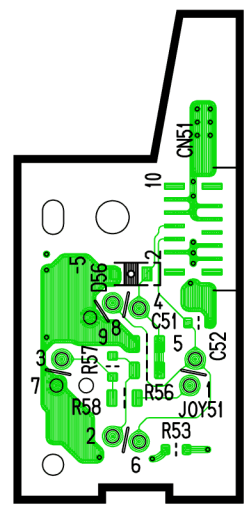

[E-9431Ab][Bottom View]

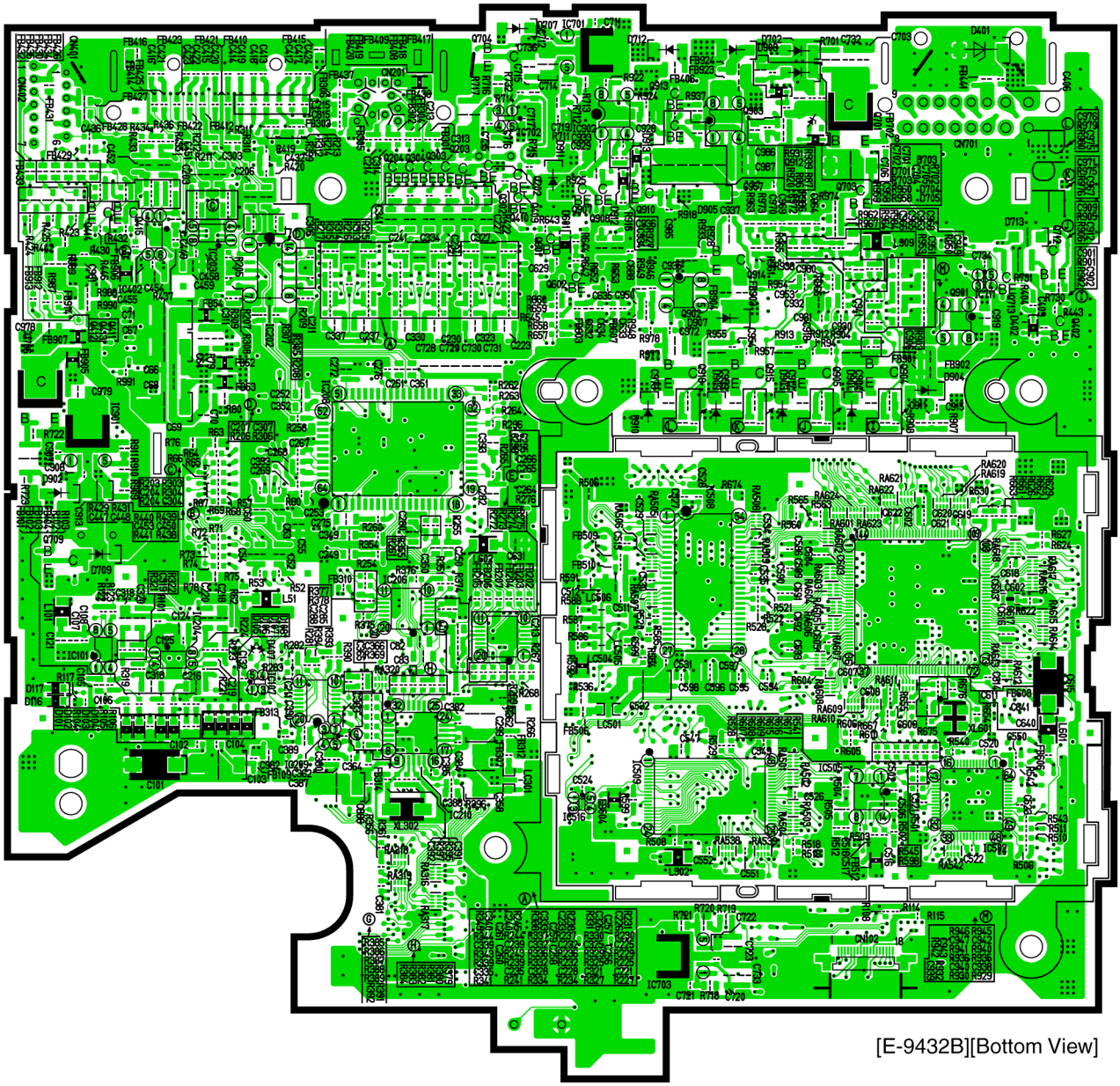

[E-9432B][Bottom View]

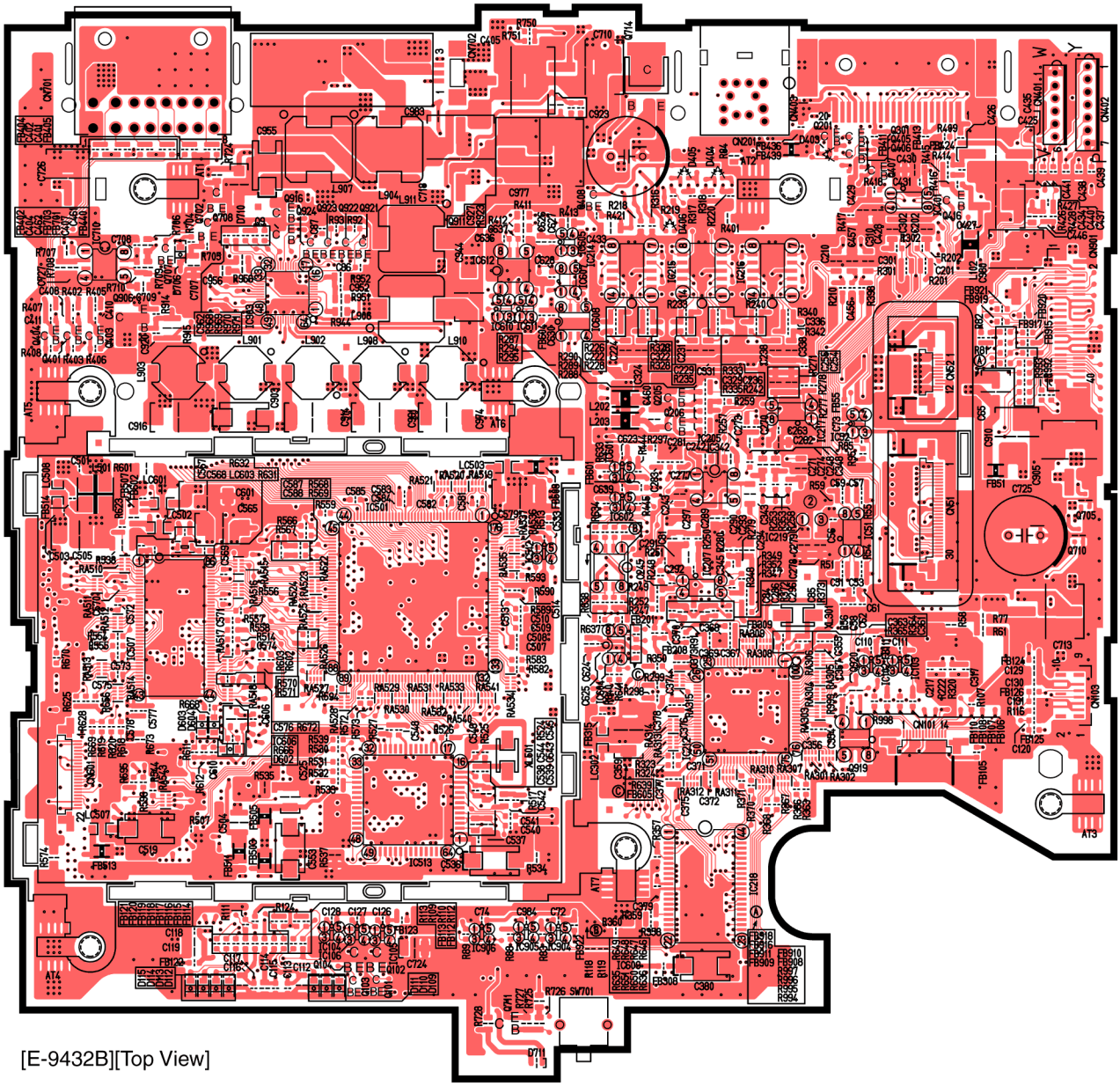

[E-9432B][Top View]

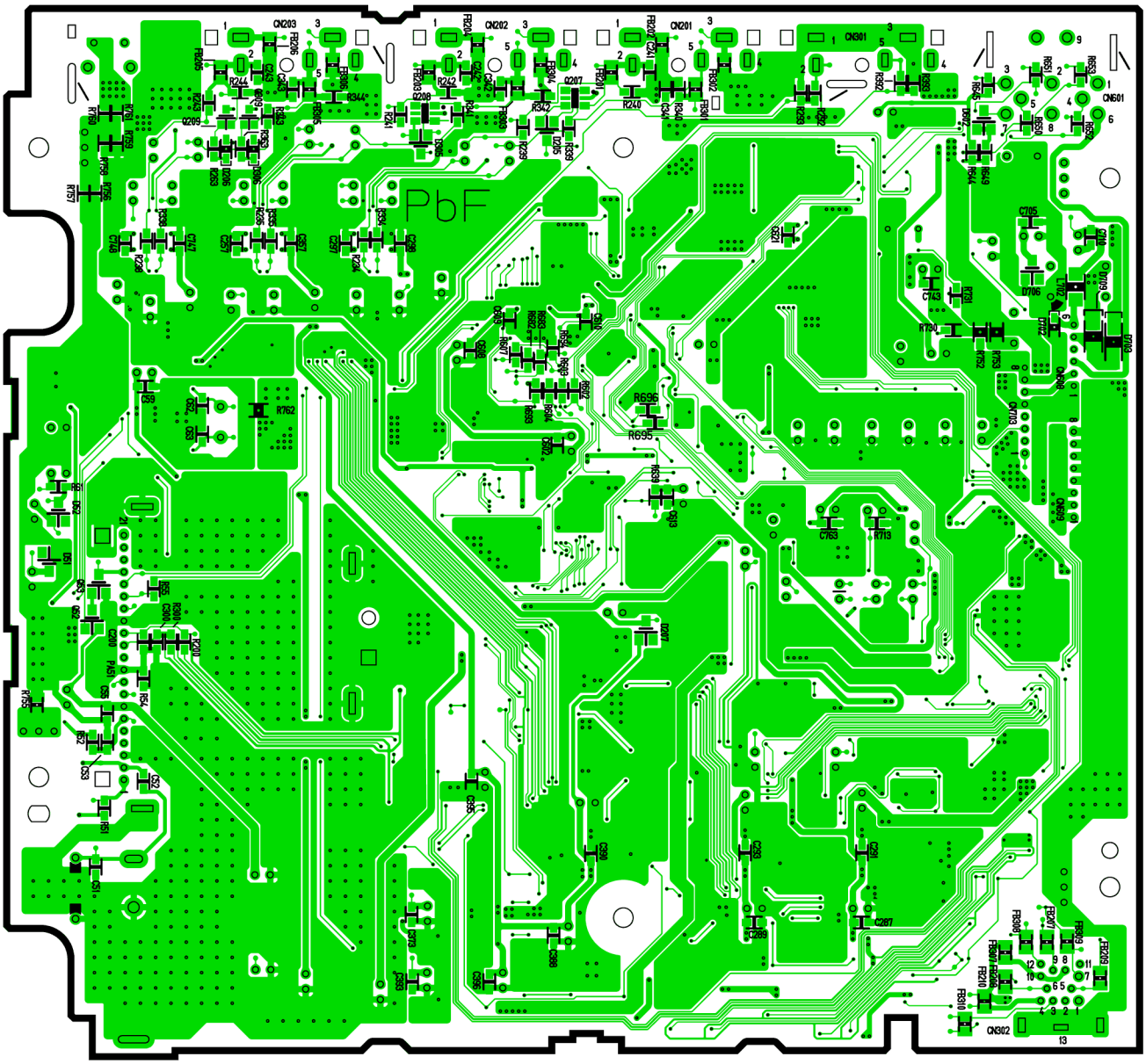

[E-6995B][Bottom View]

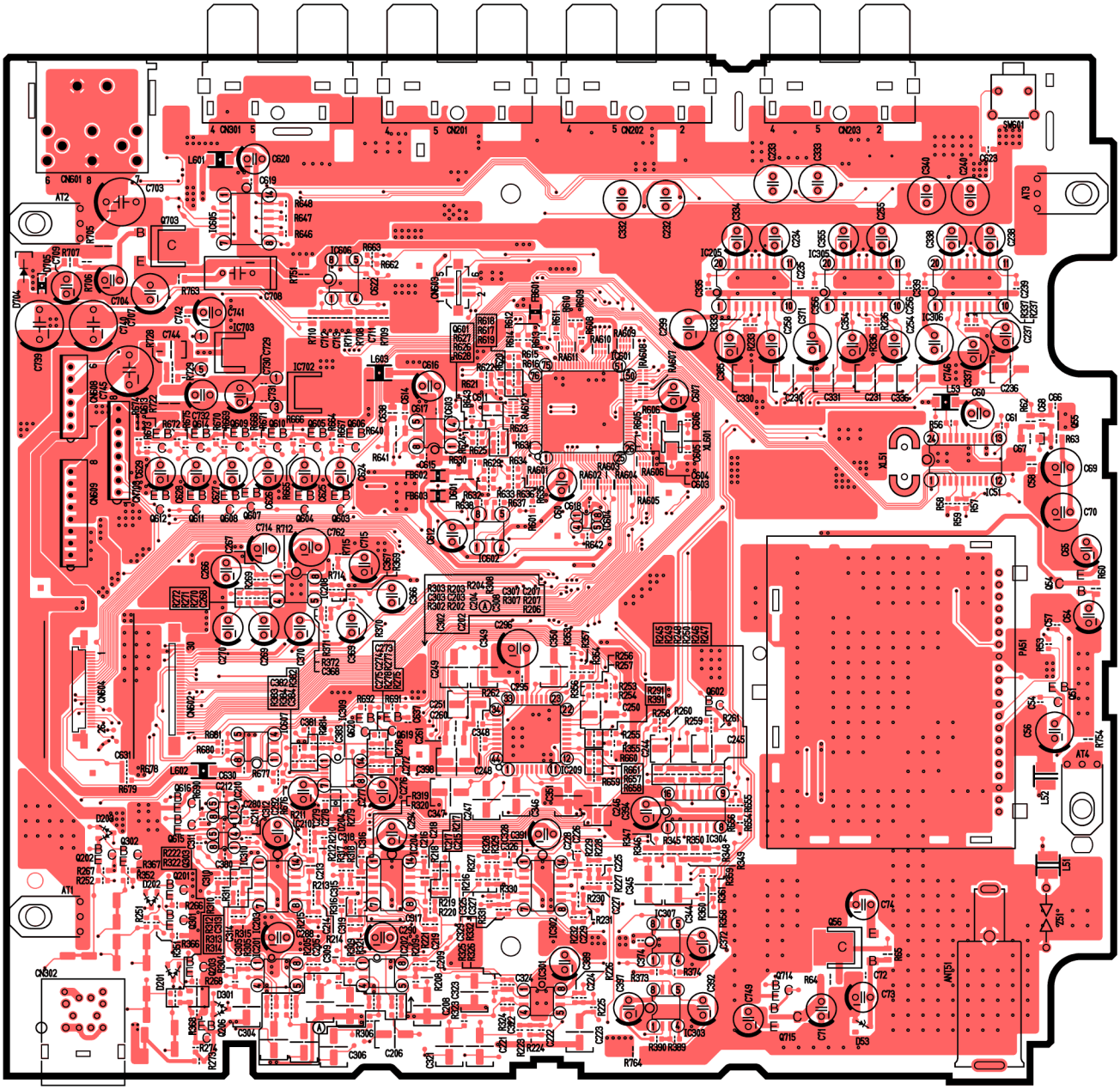

[E-6995B][Top View]

[E-9430A][Bottom View]

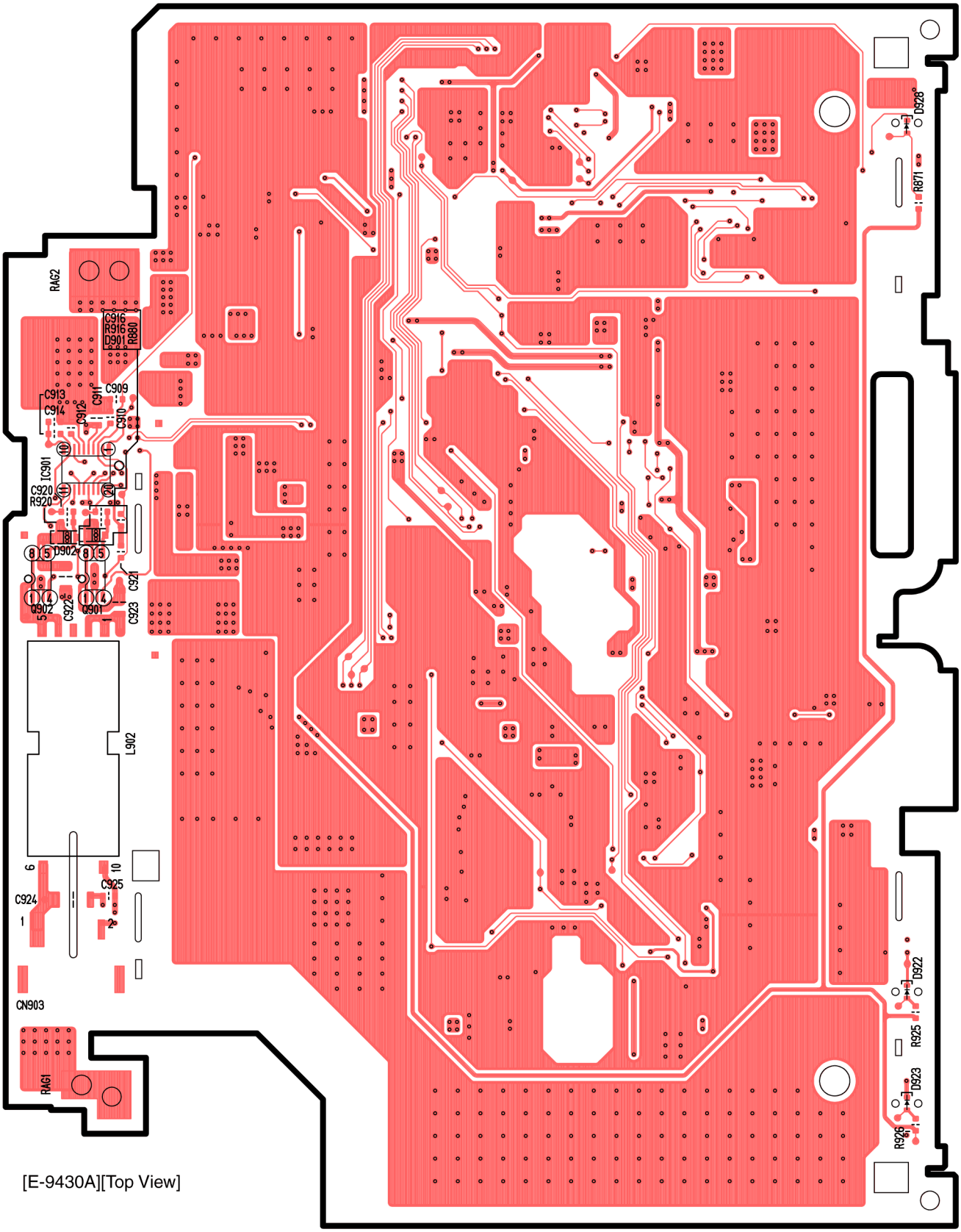

[E-9430A][Top View]

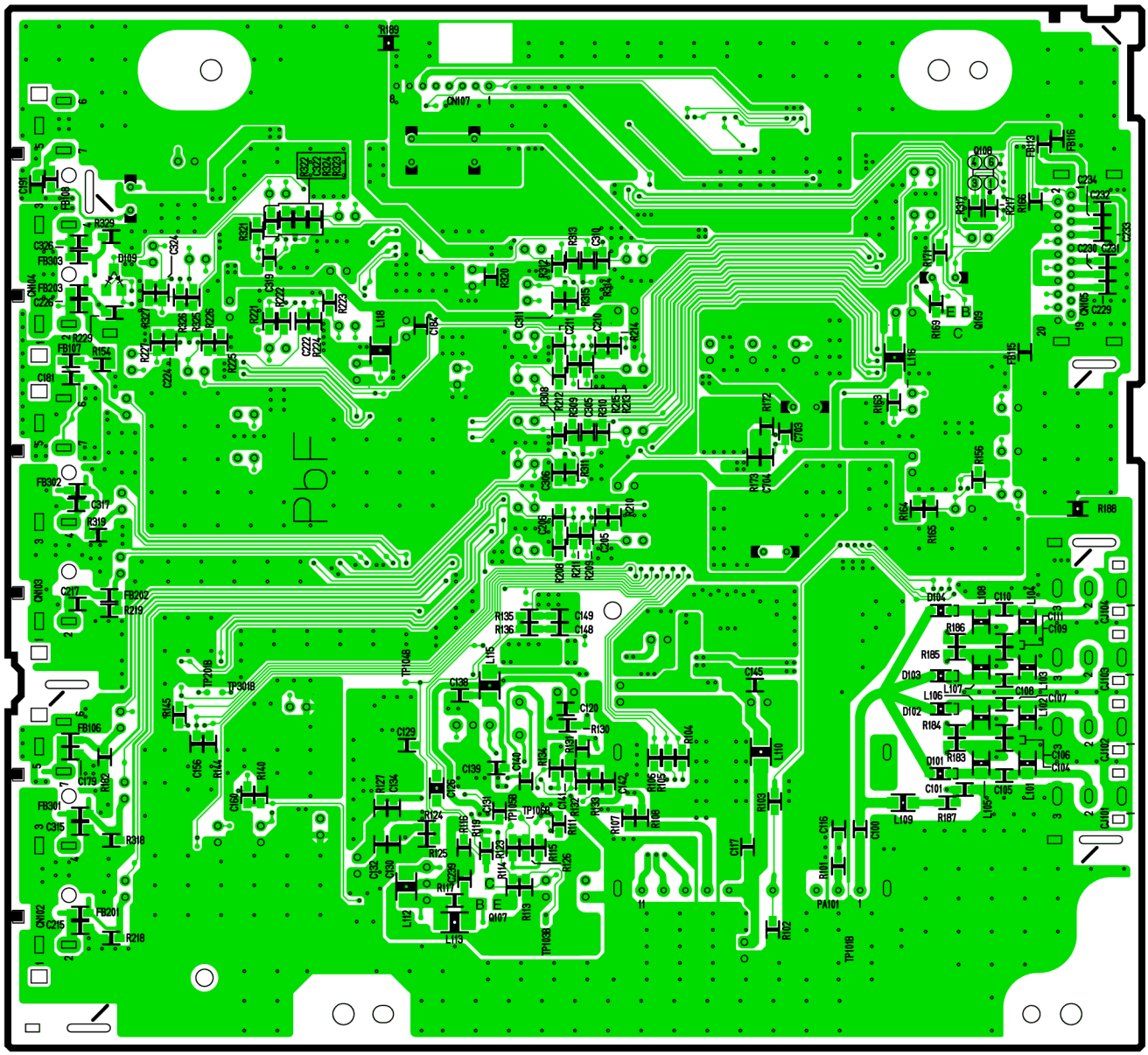

[E-9433A][Bottom View]

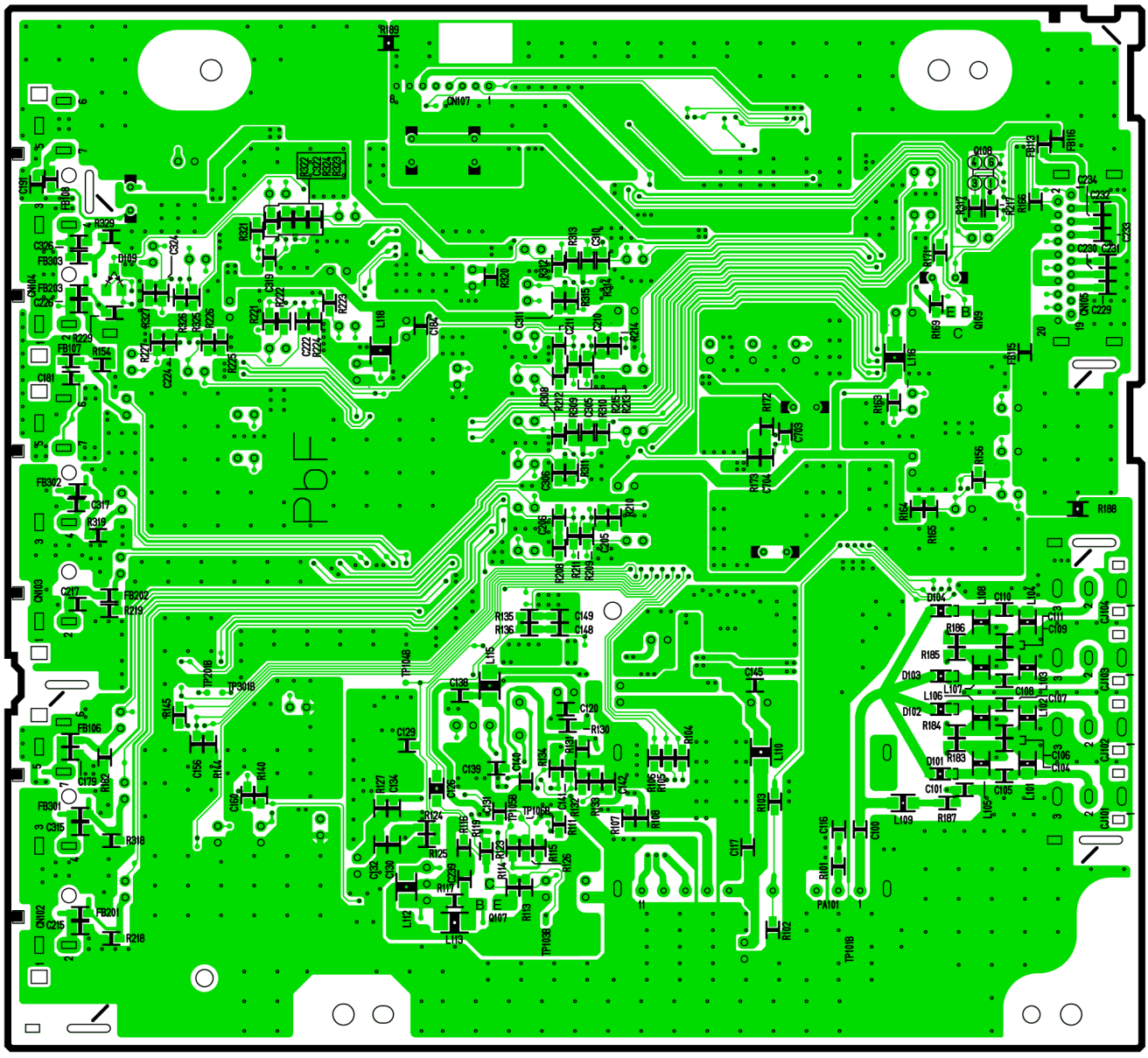

[E-9433A][Bottom View]

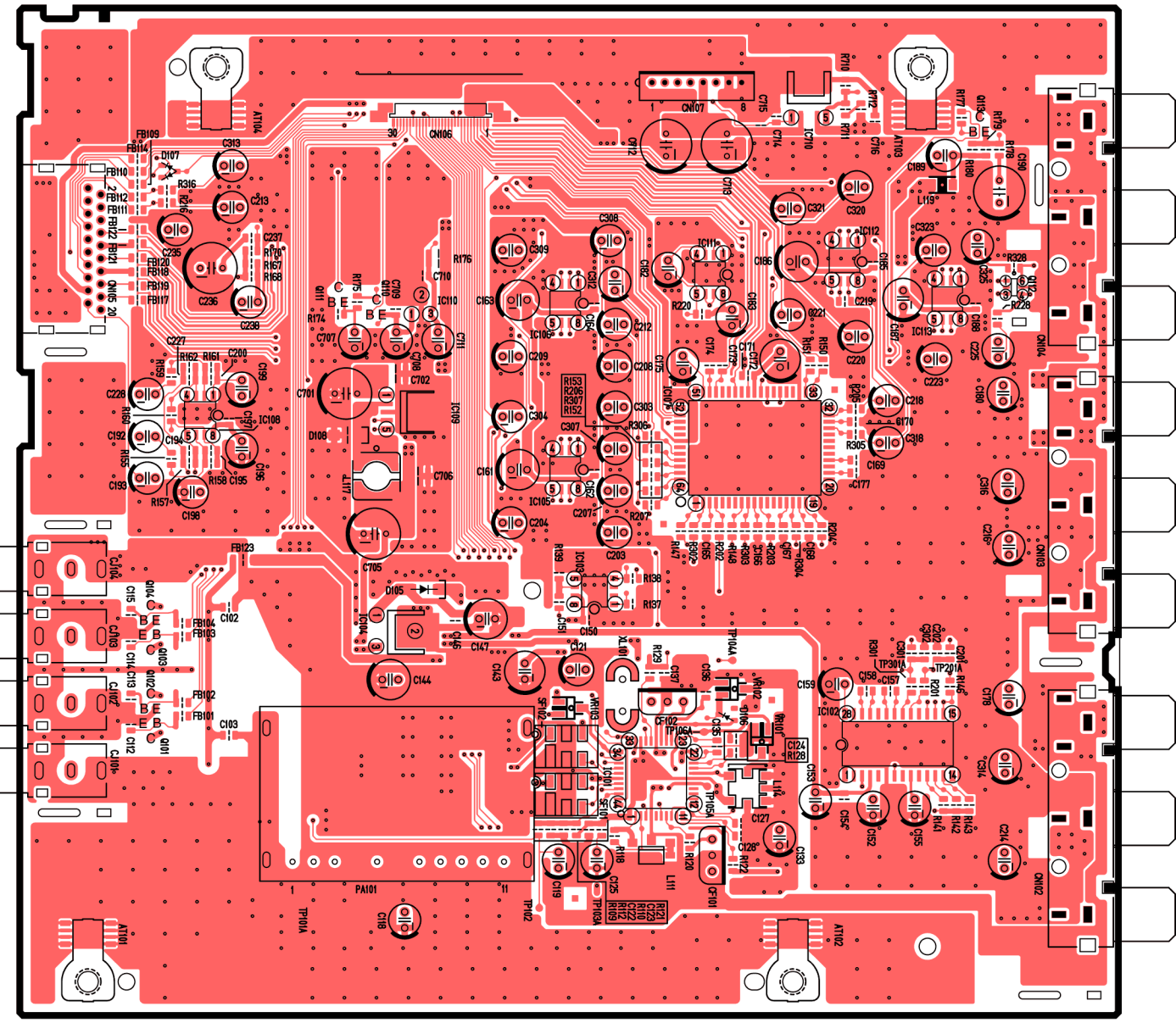

[E-9433A][Top View]

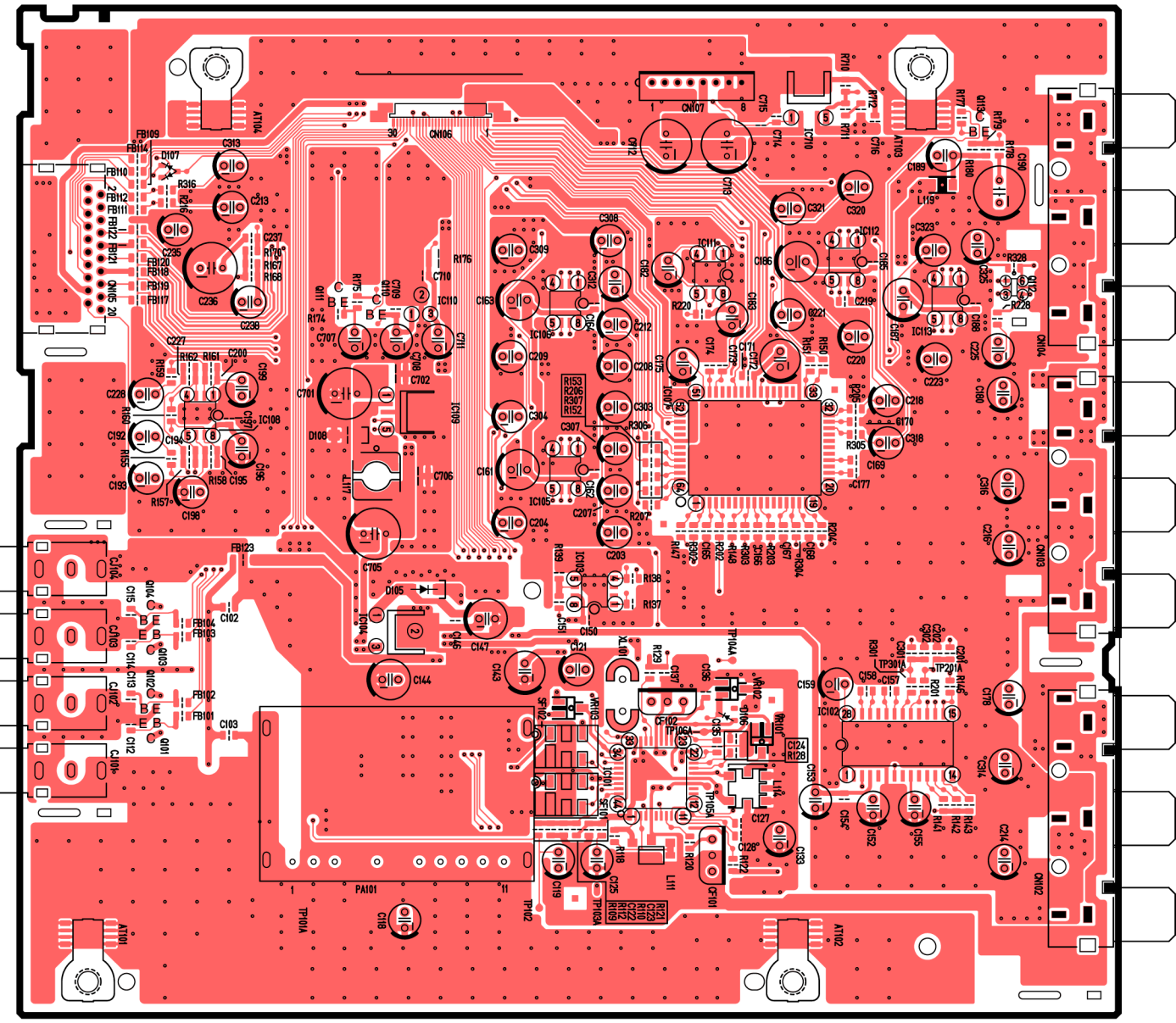

[E-9433A][Top View]

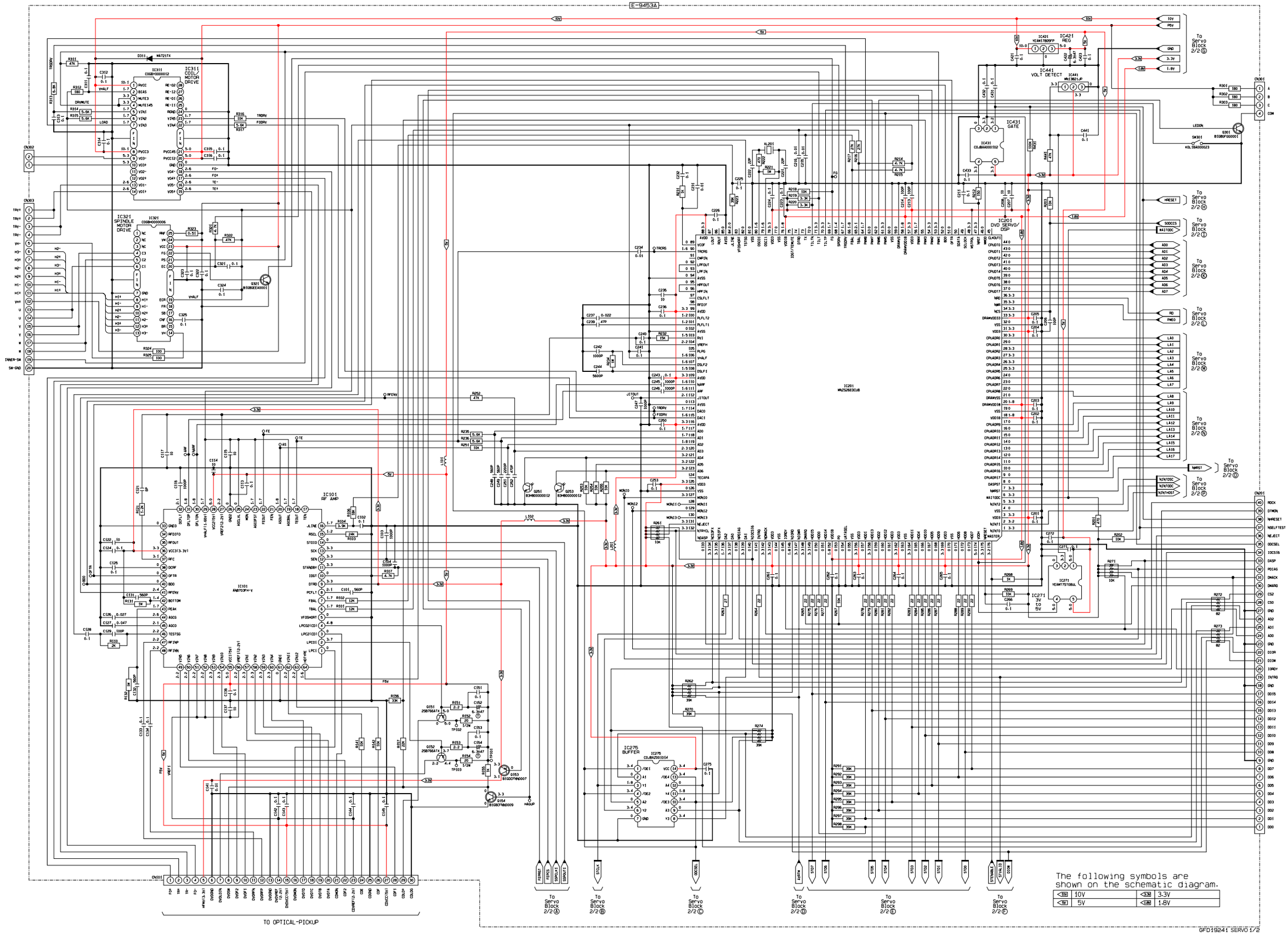
E-9453A
IC311 COIL/ MOTOR DRIVE
IC321 SPINDLE MOTOR DRIVE
IC101 RF AMP
IC201 DVD SERVO/ DSP
IC275 BUFFER
IC441 VOLT DETECT
IC431 GATE
IC421 REG
IC271 3V to 5V
TO OPTICAL-PICKUP
To Servo Block 2/2 Ⓖ
To Servo Block 2/2 Ⓗ
To Servo Block 2/2 Ⓘ
To Servo Block 2/2 Ⓚ
To Servo Block 2/2 Ⓛ
To Servo Block 2/2 Ⓜ
To Servo Block 2/2 Ⓝ
To Servo Block 2/2 Ⓞ
To Servo Block 2/2 Ⓟ
To Servo Block 2/2 Ⓐ
To Servo Block 2/2 Ⓑ
To Servo Block 2/2 Ⓒ
To Servo Block 2/2 Ⓓ
To Servo Block 2/2 Ⓔ
To Servo Block 2/2 Ⓕ
The following symbols are shown on the schematic diagram.
10V
5V
3.3V
1.8V
GFD19241 SERVO 1/2

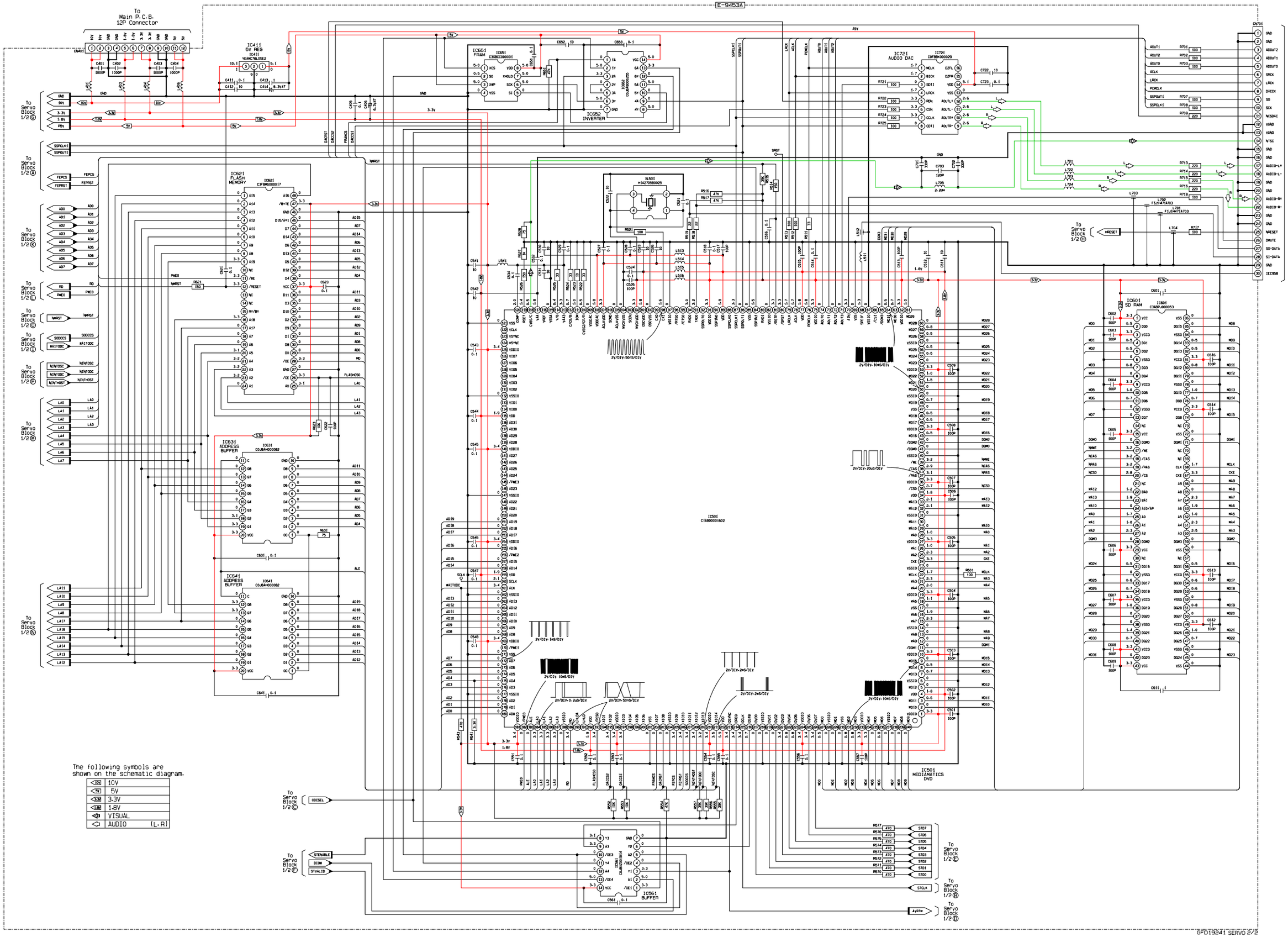

The following symbols are shown on the schematic diagram.

10V	10V
5V	5V
3.3V	3.3V
1.8V	1.8V
VISUAL	VISUAL
AUDIO (L.R)	AUDIO (L.R)

Printed in Japan (K) 2004. 4 (Recycled Paper)

E-9434A

The following symbols are shown on the schematic diagram.

◁	+B
◁ACC	ACC
◁12V	12V
◁10V	10V
◁5V	5V
◁NAVI VOICE (L.R)	NAVI VOICE (L.R)
◁AUDIO (L.R)	AUDIO (L.R)

IC207 DIGITAL AUDIO AMP

IC307 POWER AMP

IC206 AMP

IC306 AMP

IC308 VREF

IC701 DC/DC CONV

IC702 VOLT DET

CN606 → TO E-69958 CN604

CN608 → TO E-69958 CN608

CN609 → TO E-69958 CN609

CN702 → To Center Speaker Lead

CN703

CG-VD7700U
D-AMP

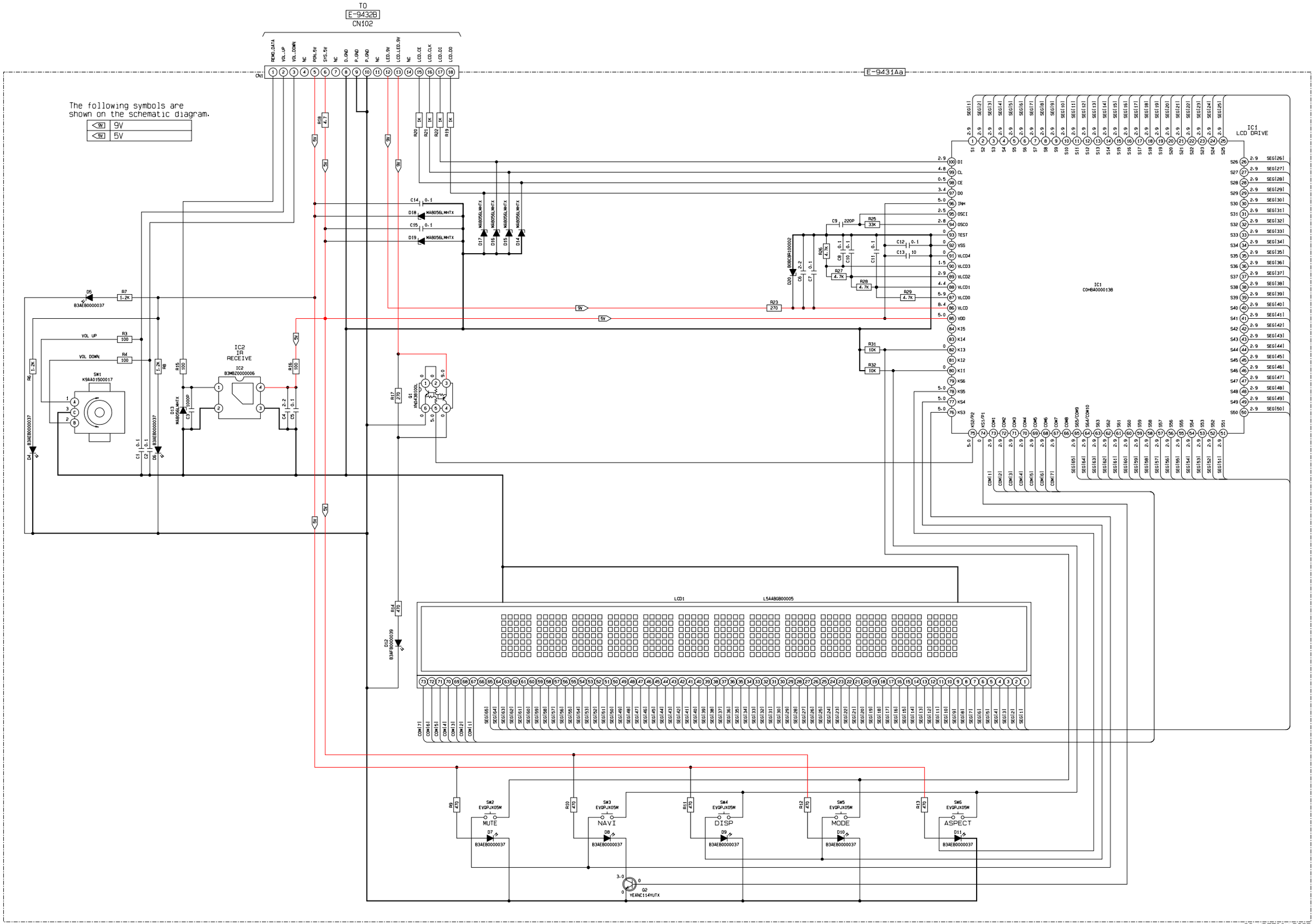

TO
E-9432B
CN102
E-9431Aa
The following symbols are shown on the schematic diagram.
9V
5V
IC1
LCD DRIVE
IC1
COHBA0000138
IC2
IR
RECEIVE
IC2
B3MBZ0000006
SW1
K9AA01500017
LCD1
L5AABGB00005
MUTE
NAVI
DISP
MODE
ASPECT
Q1
XN0438100L
Q2
YEANC114YUTX

E-6995B

The following symbols are shown on the schematic diagram.

12V	12V	RADIO	(L,R)
10V	10V	CD	(L,R)
8V	8V	AUDIO	(L,R)
5V	5V		

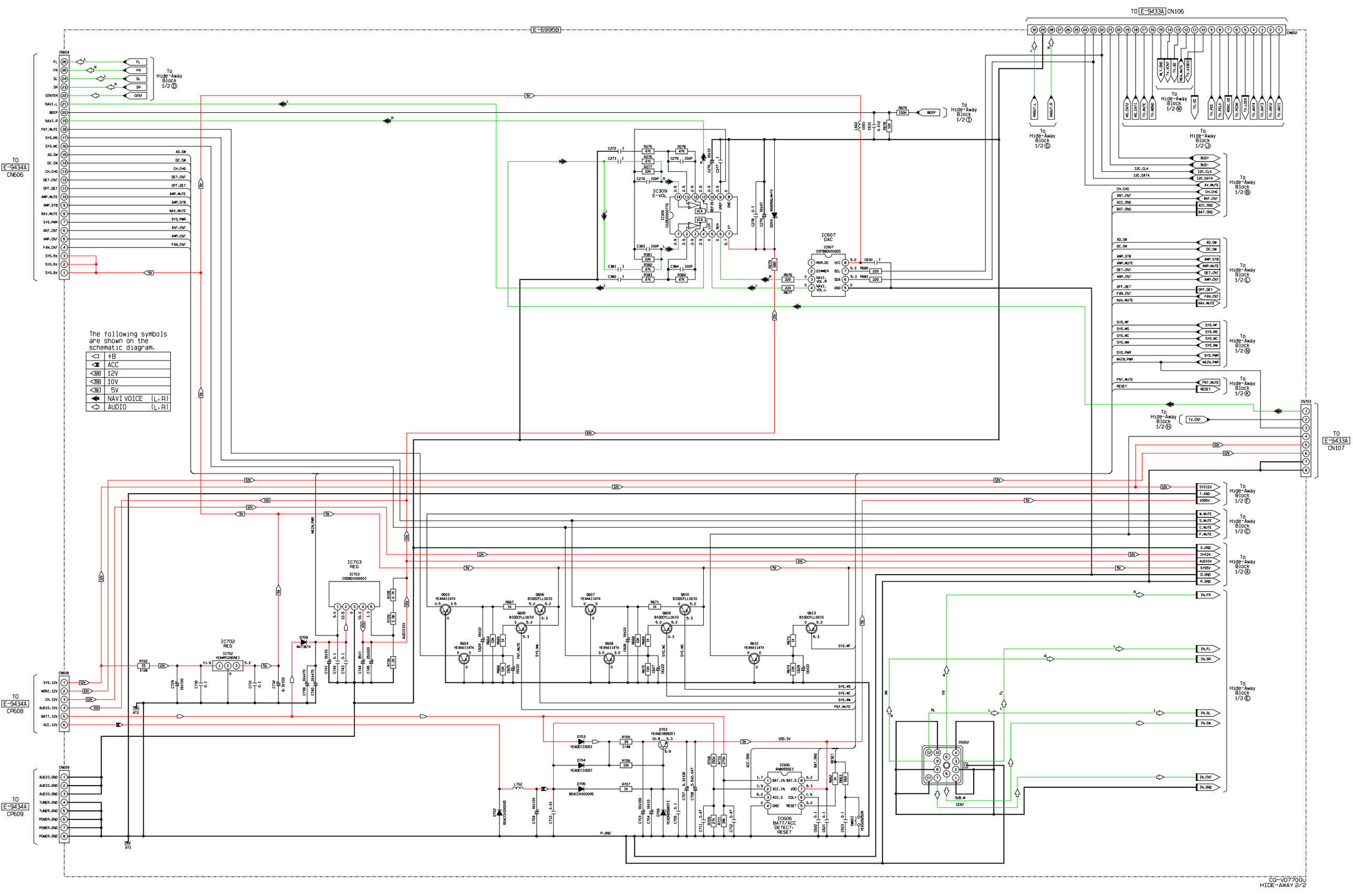

E-6995B
TO E-9433A CN106
TO E-9434A CN606
TO E-9434A CN608
TO E-9434A CN609
TO E-9433A CN107
To Hide-Away Block 1/2 Ⓓ
To Hide-Away Block 1/2 Ⓘ
To Hide-Away Block 1/2 Ⓖ
To Hide-Away Block 1/2 Ⓜ
To Hide-Away Block 1/2 Ⓙ
To Hide-Away Block 1/2 Ⓑ
To Hide-Away Block 1/2 Ⓛ
To Hide-Away Block 1/2 Ⓝ
To Hide-Away Block 1/2 Ⓚ
To Hide-Away Block 1/2 Ⓗ
To Hide-Away Block 1/2 Ⓕ
To Hide-Away Block 1/2 Ⓒ
To Hide-Away Block 1/2 Ⓐ
To Hide-Away Block 1/2 Ⓔ
IC309 E-VOL
IC607 DAC
IC703 REG
IC702 REG
IC606 BATT/ACC DETECT·RESET
The following symbols are shown on the schematic diagram.
+B
ACC
12V
10V
5V
NAVI VOICE (L.R)
AUDIO (L.R)
CQ-VD7700U
HIDE-AWAY 2/2

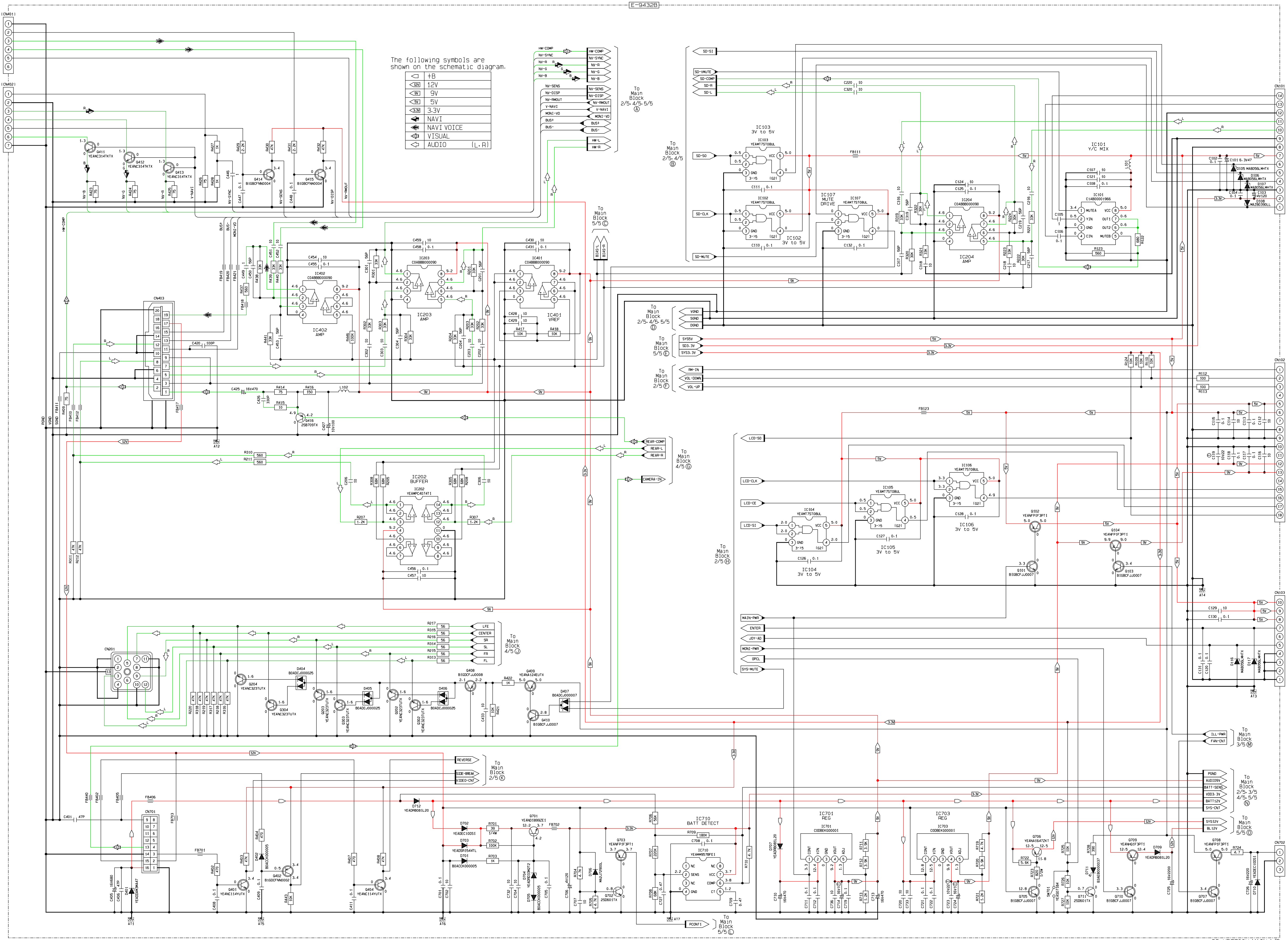
E-9432B
The following symbols are shown on the schematic diagram.
+B
12V
9V
5V
3.3V
NAVI
NAVI VOICE
VISUAL
AUDIO (L.R)
IC101 Y/C MIX
IC102 3V to 5V
IC103 3V to 5V
IC104 3V to 5V
IC105 3V to 5V
IC106 3V to 5V
IC107 MUTE DRIVE
IC202 BUFFER
IC203 AMP
IC204 AMP
IC401 VREF
IC402 AMP
IC701 REG
IC703 REG
IC710 BATT DETECT
TO UNT1
TO E-9431A@ CN1
TO E-9431A@ CN51
To M1

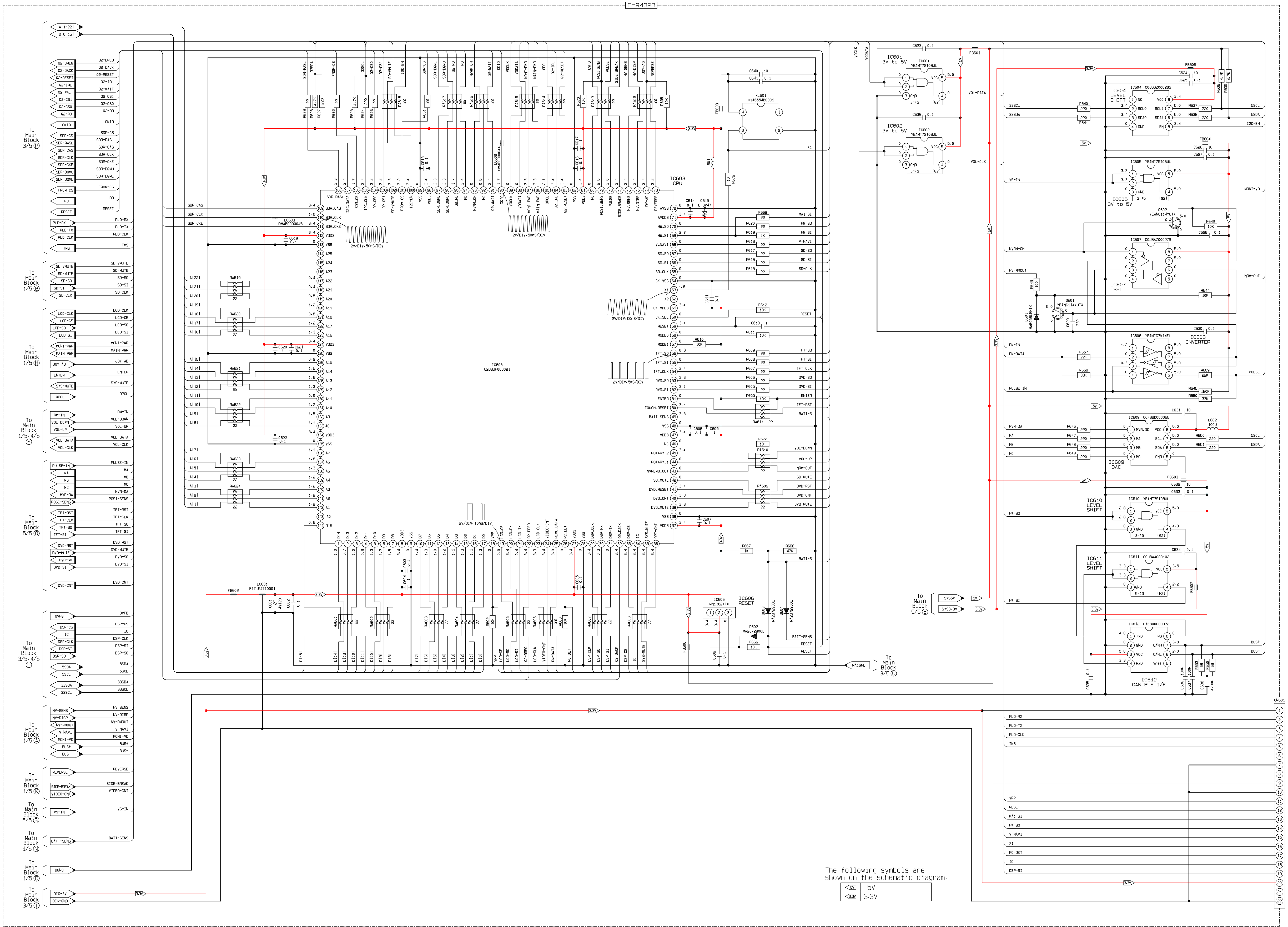
E-9432B
IC603
CPU
IC603
C2DBJH000021
IC601
3V to 5V
IC601
YEAMT7ST08UL
IC602
3V to 5V
IC602
YEAMT7ST08UL
IC604
LEVEL
SHIFT
IC604 C0JBBZ000285
IC605 YEAMT7ST08UL
IC605
3V to 5V
Q602
YEANC114YUTX
IC607 C0JBAZ000279
IC607
SEL
Q601
YEANC114YUTX
D601
MA8056LMHTX
IC608 YEAMTC7W14FL
IC608
INVERTER
IC609 C0FBBD000065
IC609
DAC
IC610
LEVEL
SHIFT
IC610 YEAMT7ST08UL
IC611
LEVEL
SHIFT
IC611 C0JBAA000102
IC612 C1EB00000072
IC612
CAN BUS I/F
IC606
MN1382KTX
IC606
RESET
D602
MA2J72900L
D603
MA2J72900L
D604
MA2J72900L
XL601
H1A6554B0001
LC601
F1Z1E4710001
LC602
J0MAB0000044
LC603
J0MAB0000045
CN601
2V/DIV・50nS/DIV
2V/DIV・50nS/DIV
2V/DIV・50nS/DIV
2V/DIV・5mS/DIV
2V/DIV・10mS/DIV
To Main Block 3/5 Ⓟ
To Main Block 1/5 Ⓑ
To Main Block 1/5 Ⓗ
To Main Block 1/5, 4/5 Ⓕ
To Main Block 5/5 Ⓠ
To Main Block 3/5, 4/5 Ⓡ
To Main Block 1/5 Ⓐ
To Main Block 1/5 Ⓚ
To Main Block 5/5 Ⓢ
To Main Block 1/5 Ⓝ
To Main Block 1/5 Ⓓ
To Main Block 3/5 Ⓣ
To Main Block 3/5 Ⓤ
To Main Block 5/5 Ⓔ
The following symbols are
shown on the schematic diagram.
5V
3.3V

The following symbols are shown on the schematic diagram.

3.3V	3.3V
	VISUAL

IC501 C10B00000516

IC501 GRAPHICS RENDERER

IC507 SDRAM C3MBJ0000056

IC512 C0JBA8000176 INVERTER

IC513 VIDEO DECODER C1AB00000350

IC505 PLL C3ABFA000014

IC502 CPLD C0JBZZ000314

IC509 FLASH MEMORY C3FBF0000132

IC508 SDRAM C3MBP0000126

IC516 QR

To Main Block 5/5Ⓢ

To Main Block 2/5Ⓡ

To Main Block 1/5Ⓜ

To Main Block 5/5Ⓜ

To Main Block 2/5Ⓟ

To Main Block 4/5Ⓥ

To Main Block 2/5Ⓣ

To Main Block 5/5Ⓔ

To Main Block 1/5Ⓝ

To Main Block 2/5Ⓤ

The following symbols are shown on the schematic diagram.

9V	9V
5V	5V
3.3V	3.3V
2.5V	2.5V
VISUAL	VISUAL
AUDIO (L,R)	AUDIO (L,R)

IC206 AUDIO ADC

IC207 AMP

IC205 FL-VOL

IC219 REG

IC209 CLOCK SEL

IC211 CLOCK SEL

IC210 DOLBY SURROUND DECODER

IC212 AUDIO DSP

IC208 AV SWITCH

IC213 AUDIO DAC

IC214 AMP

IC215 AMP

IC216 AMP

IC217 VREF

IC218 SRAM

To Main Block 2/5-3/5 (R)

To Main Block 2/5 (F)

To Main Block 5/5 (K)

To Main Block 3/5 (U)

To Main Block 5/5 (G)

To Main Block 5/5 (Y)

To Main Block 1/5 (B)

To Main Block 1/5 (N)

To Main Block 1/5 (A)

To Main Block 5/5 (E)

To Main Block 1/5 (D)

To Main Block 1/5 (J)

The following symbols are shown on the schematic diagram.

◁	+B
◁12V	12V
◁10V	10V
◁9V	9V
◁7V	7V
◁5V	5V
◁3.3V	3.3V
◁2.5V	2.5V
◁1.8V	1.8V
◀	NAVI
◀	VISUAL
◁	AUDIO (L.R)

To Main Block 2/5 Ⓐ
To Main Block 2/5,3/5 Ⓢ
To Main Block 1/5 Ⓐ
To Main Block 4/5 Ⓧ
To Main Block 1/5 Ⓛ
To Main Block 1/5 Ⓒ
To Main Block 3/5 Ⓦ
To Main Block 1/5,2/5 3/5,4/5 Ⓔ
To Main Block 4/5 Ⓨ
To Main Block 1/5 Ⓝ
To Main Block 1/5 Ⓑ
To Slide Mechanism ASS'Y
TO E-9430A CN901
TO E-9453A CN701
TO E-9453A CN401

CD-VD7700U MAIN 5/5

21 SCHEMATIC DIAGRAM -2

21.1. Main-1 Block

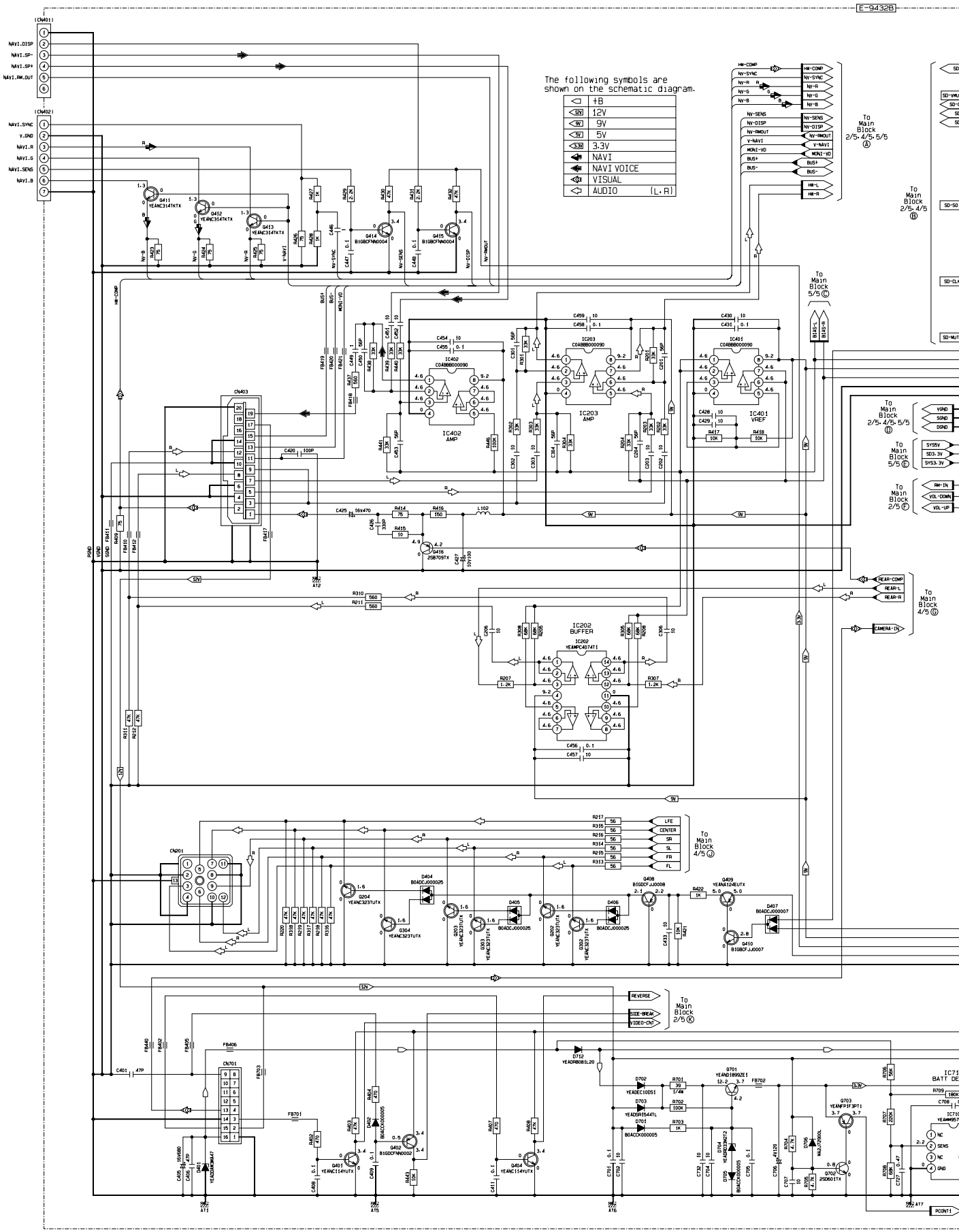

21.2. Main-2 Block

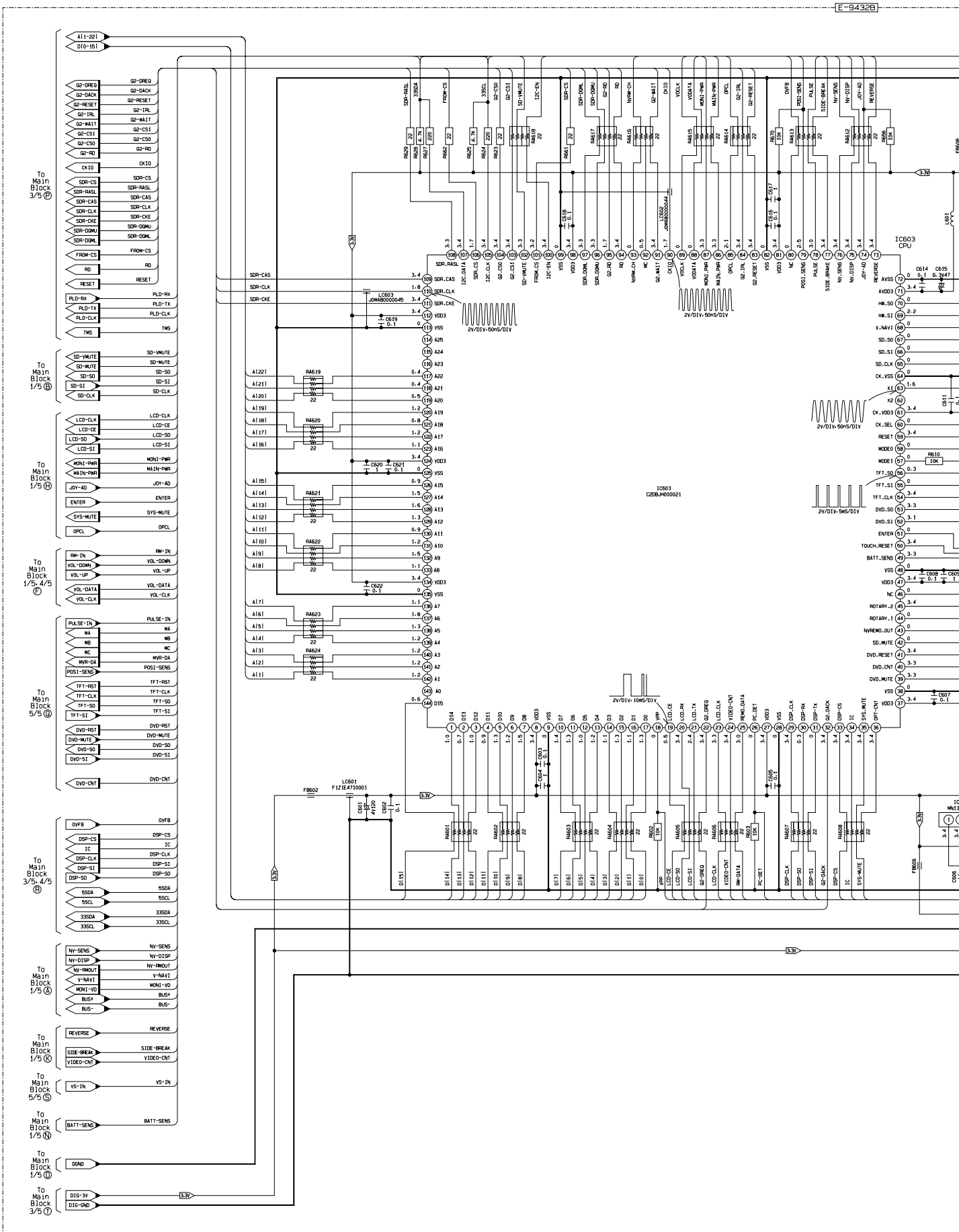

21.3. Main-3 Block

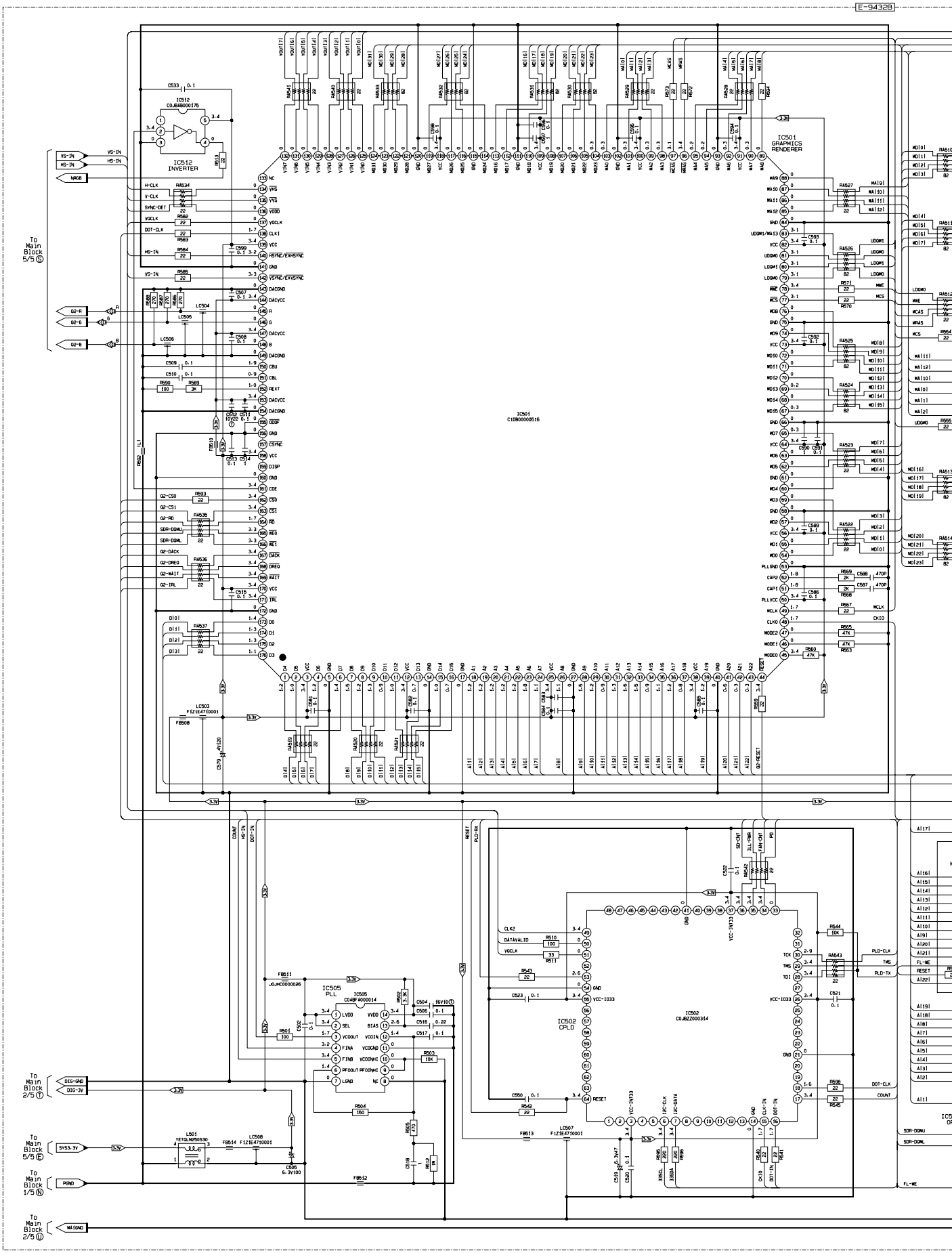

21.4. Main-4 Block

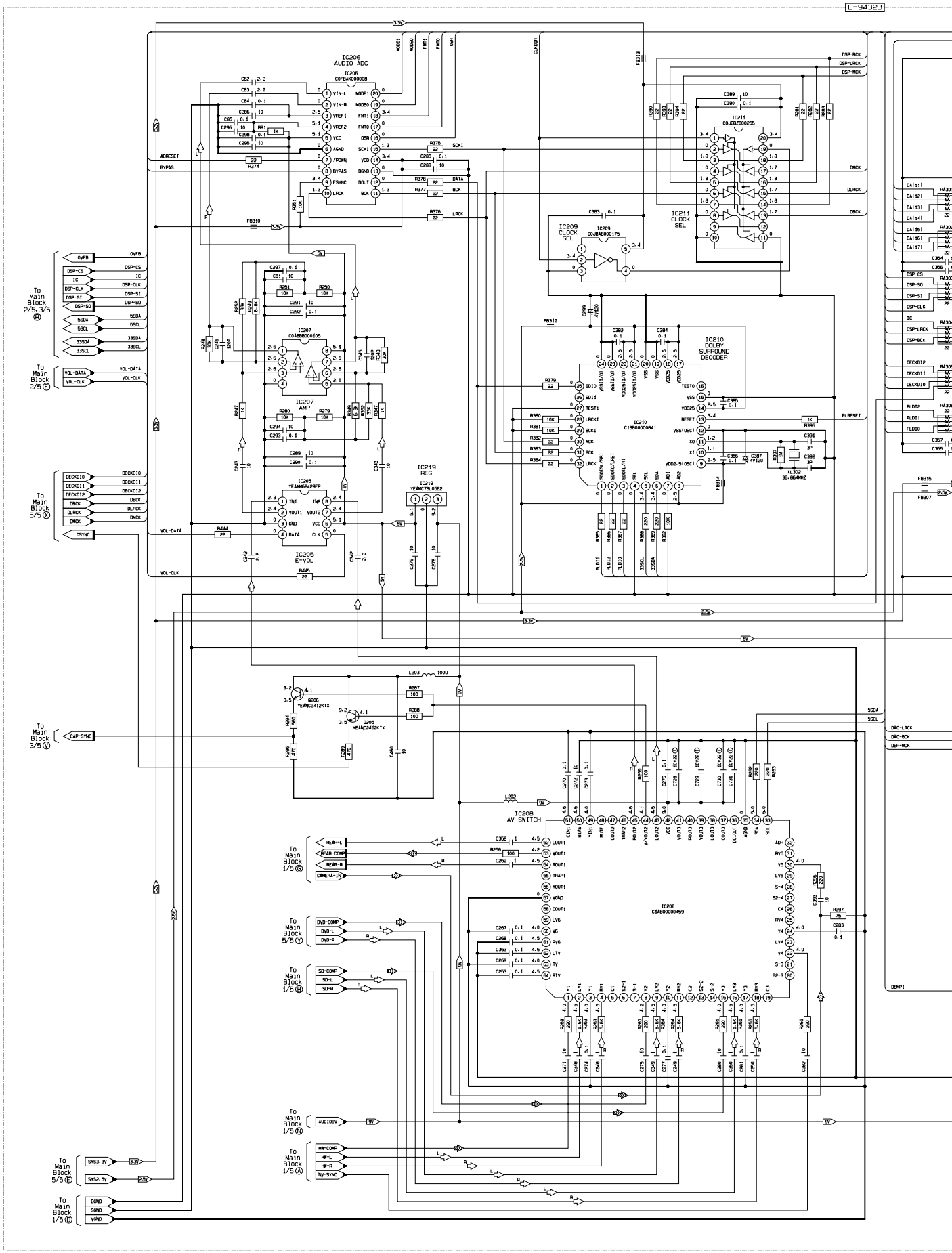

21.5. Main-5 Block

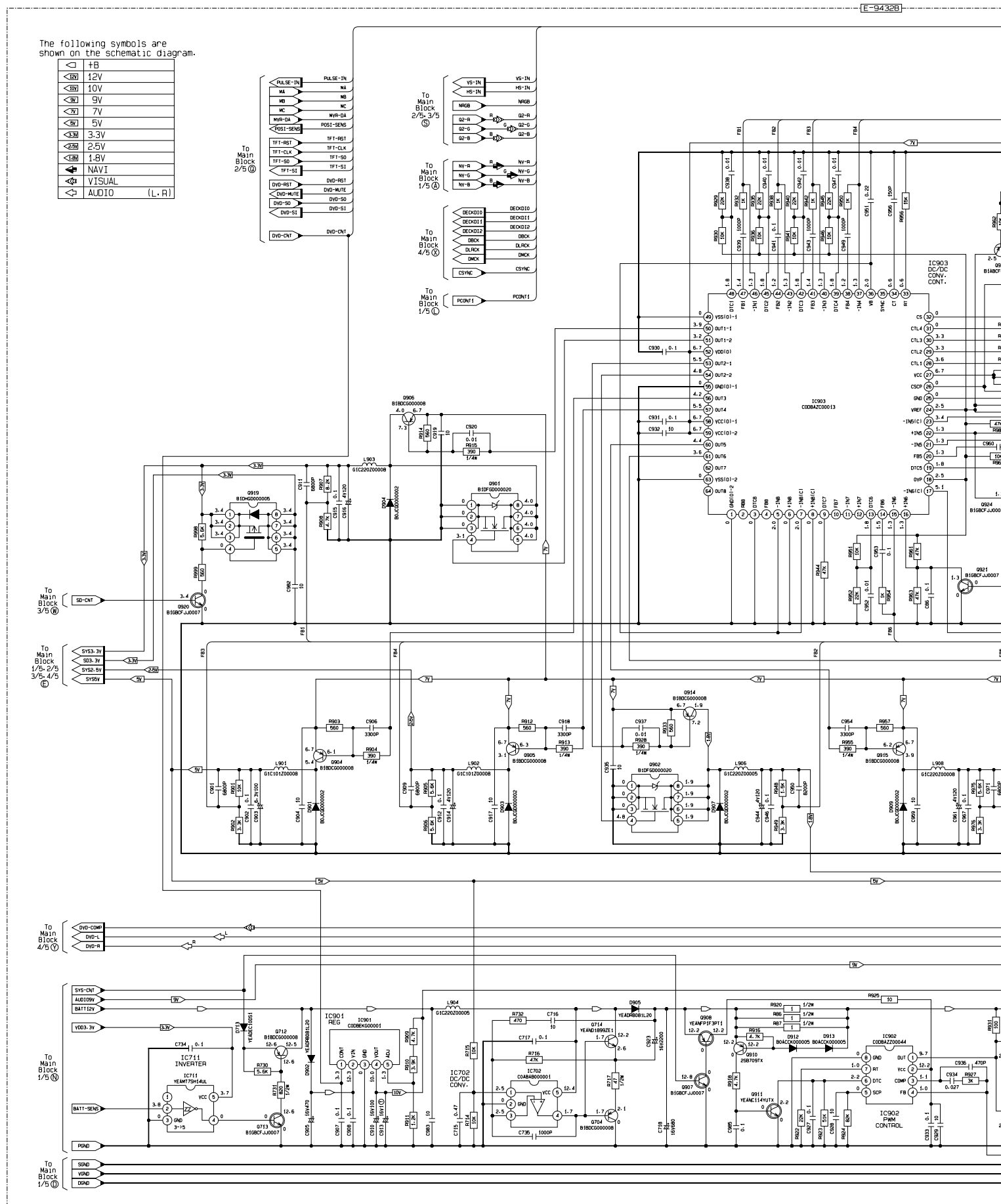

21.6. TFT Block

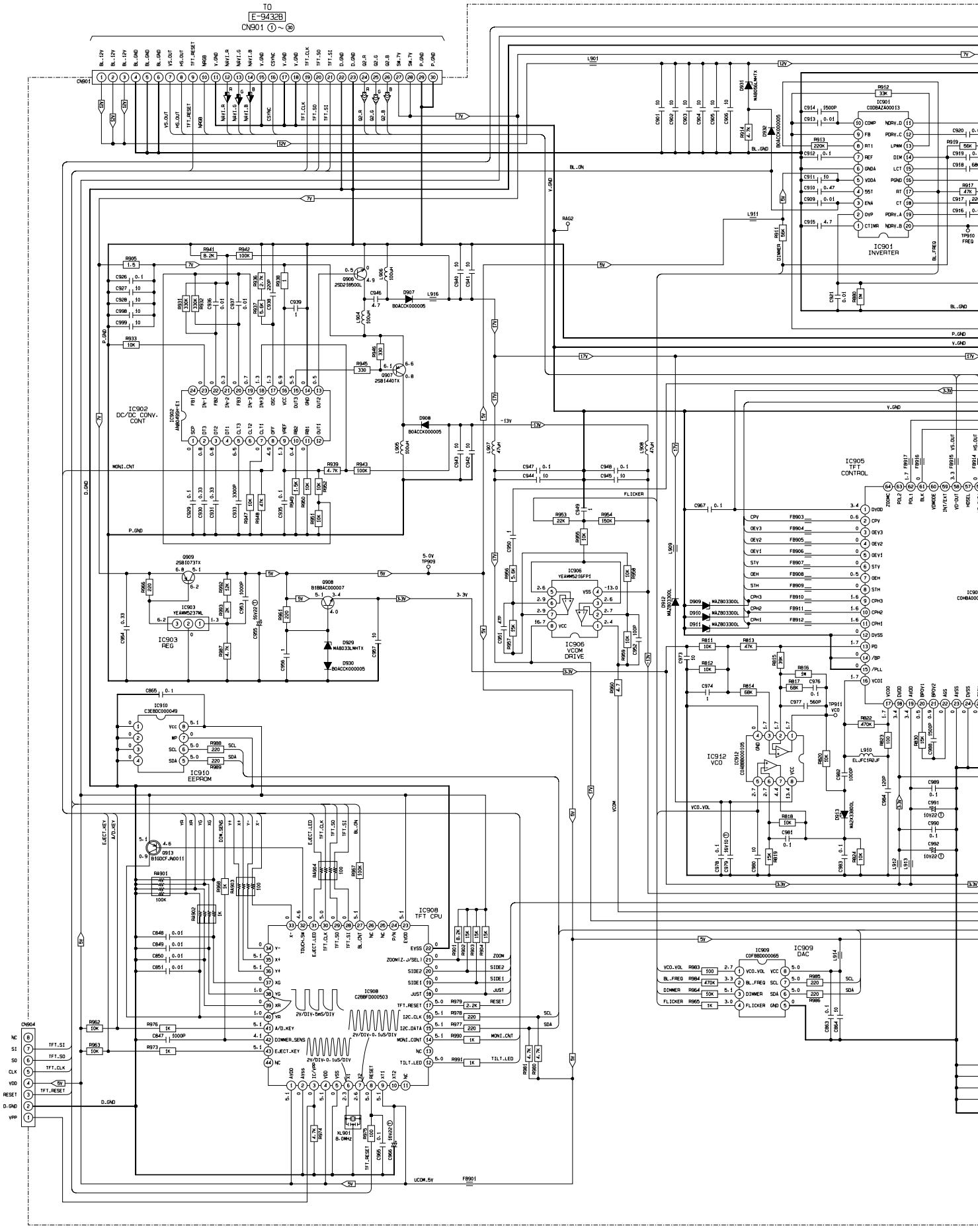

21.7. Display Block

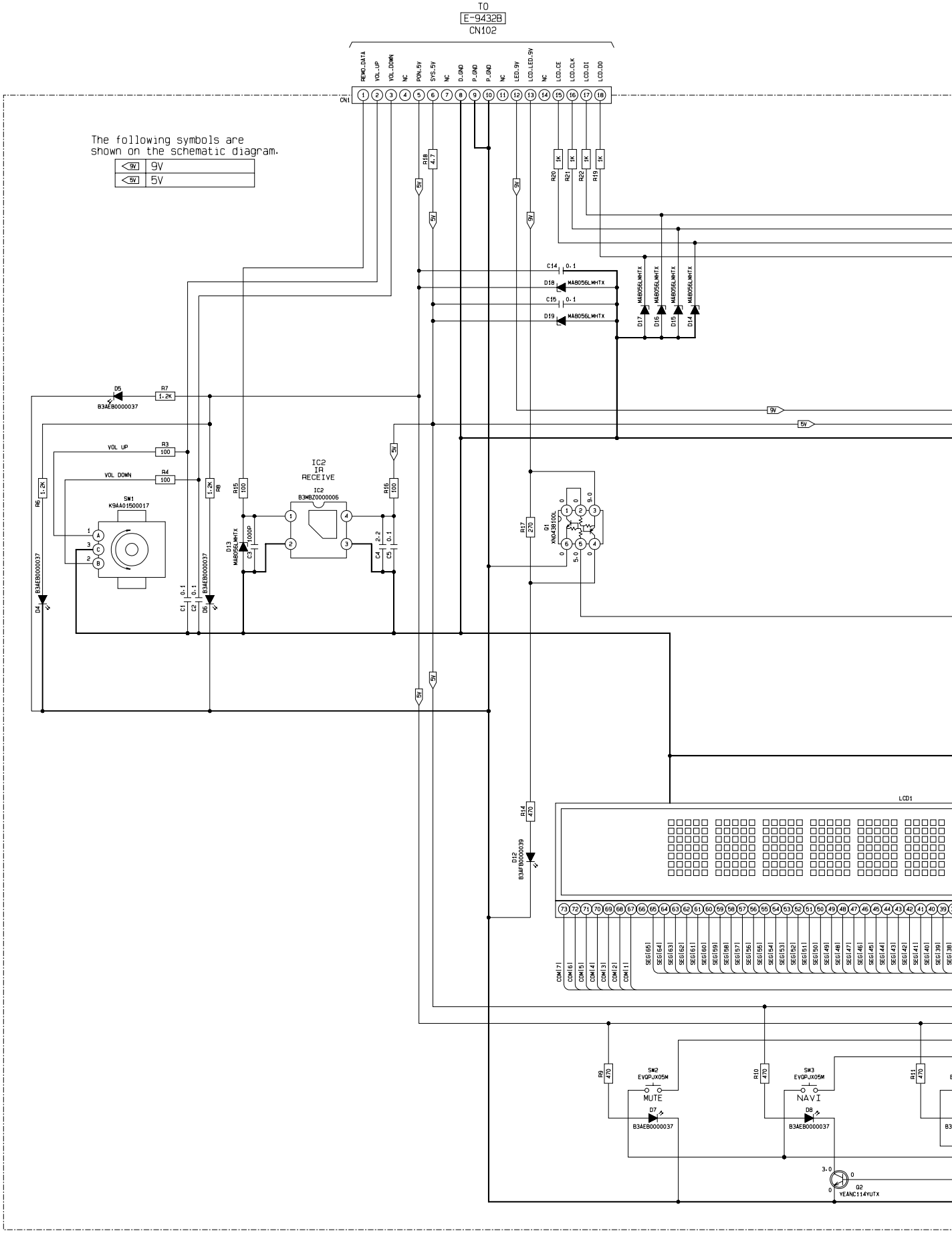

21.8. Radio-1 Block

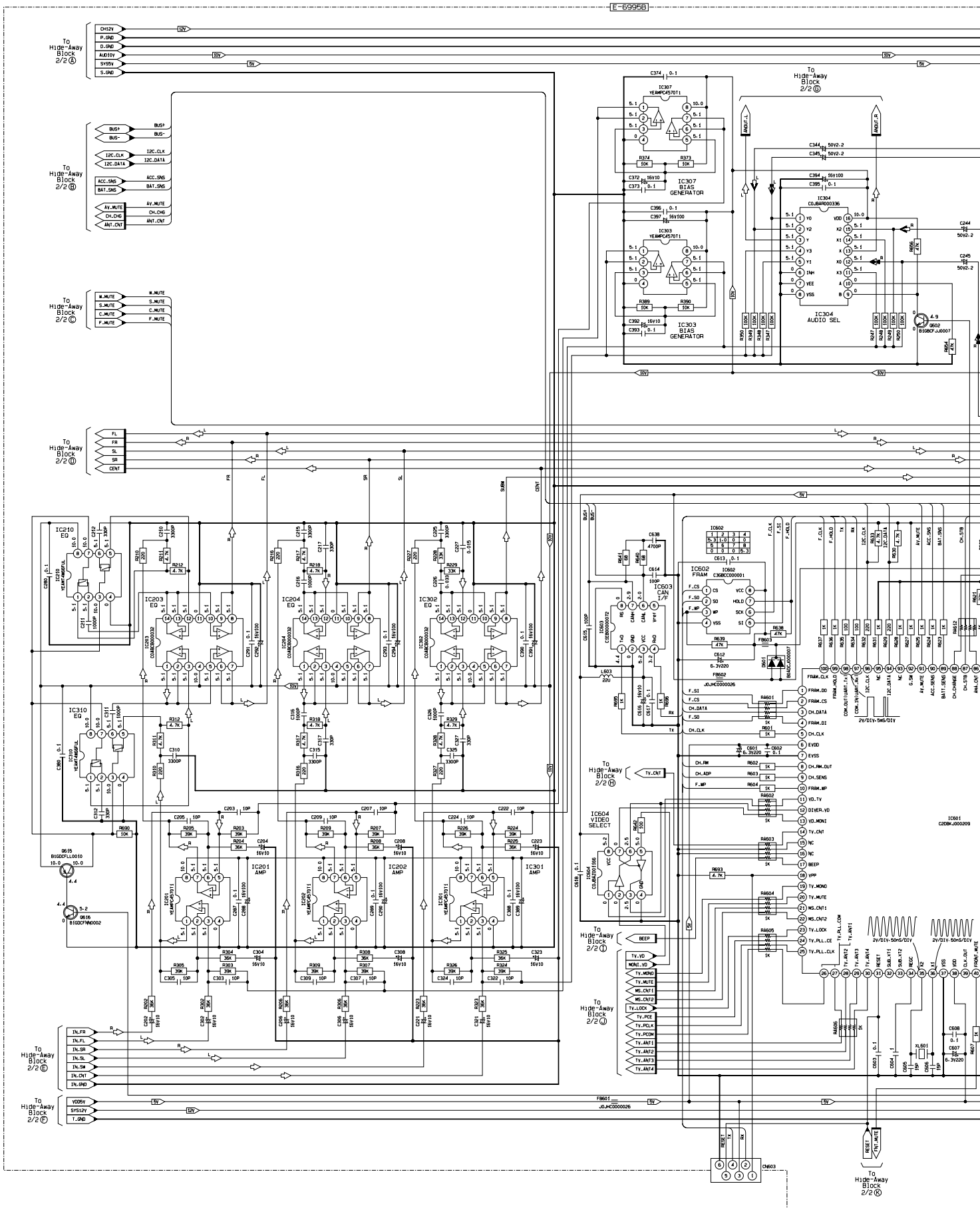

21.9. Radio-2 Block

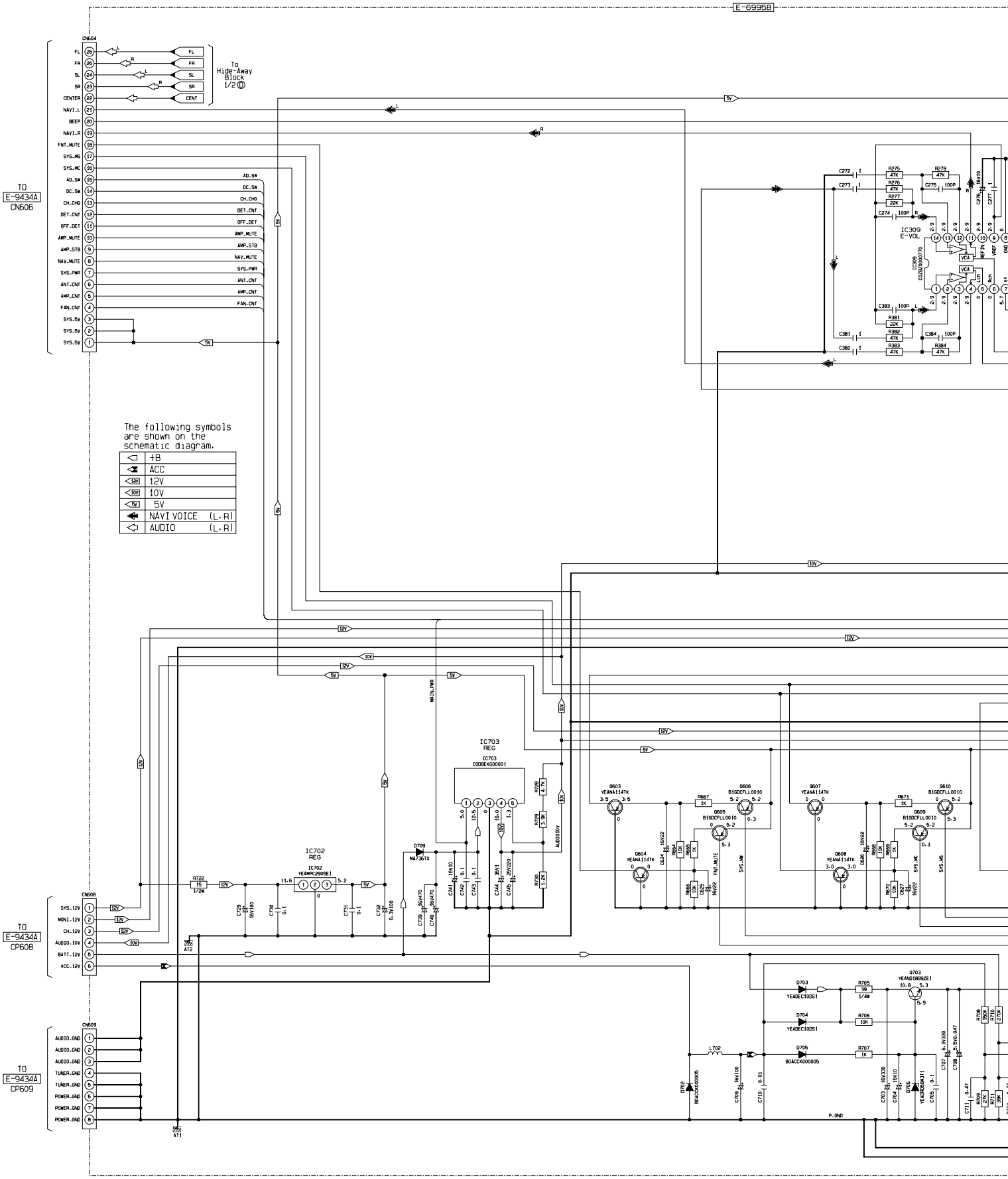

21.10. TV Block

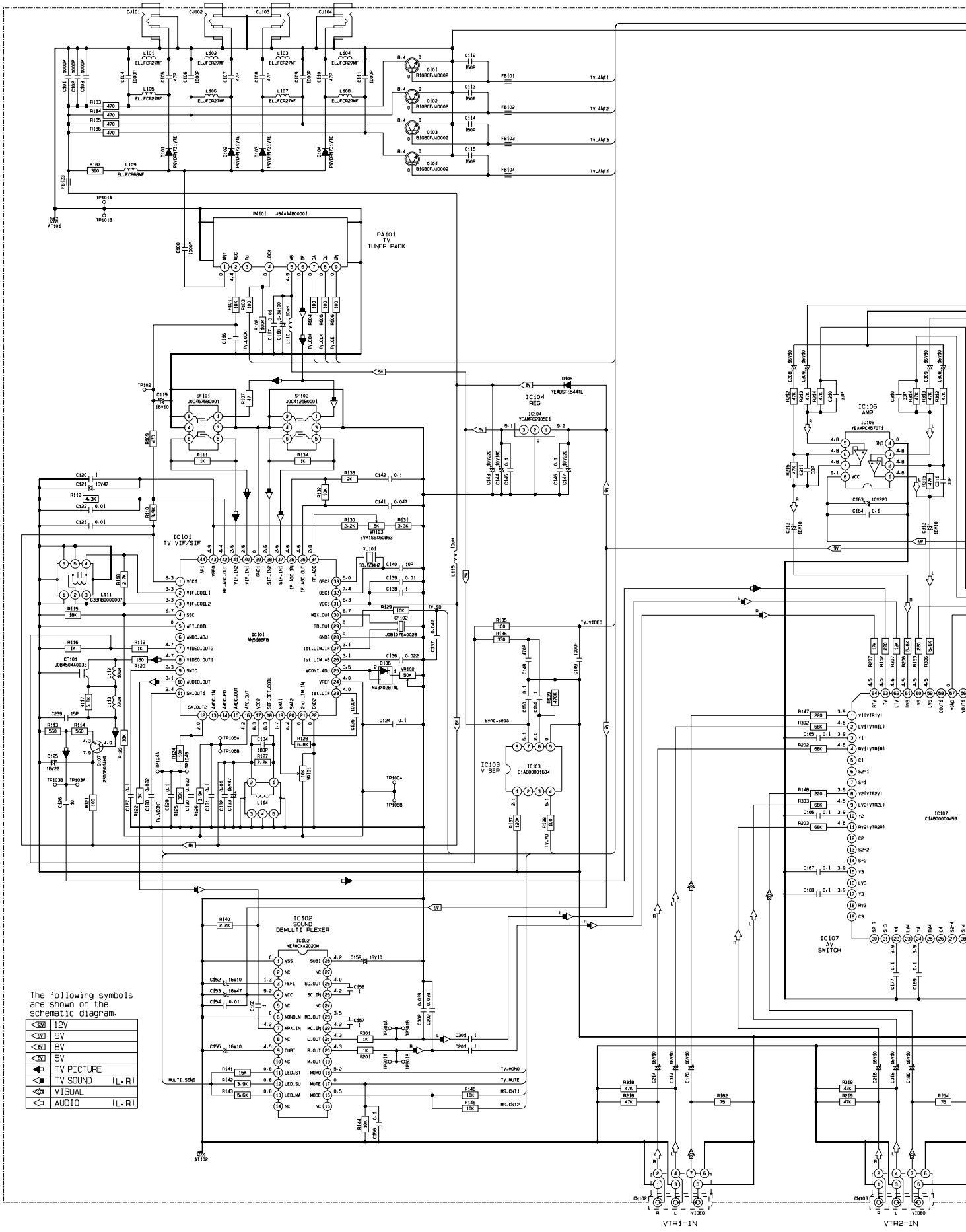

21.11. D-AMP Block

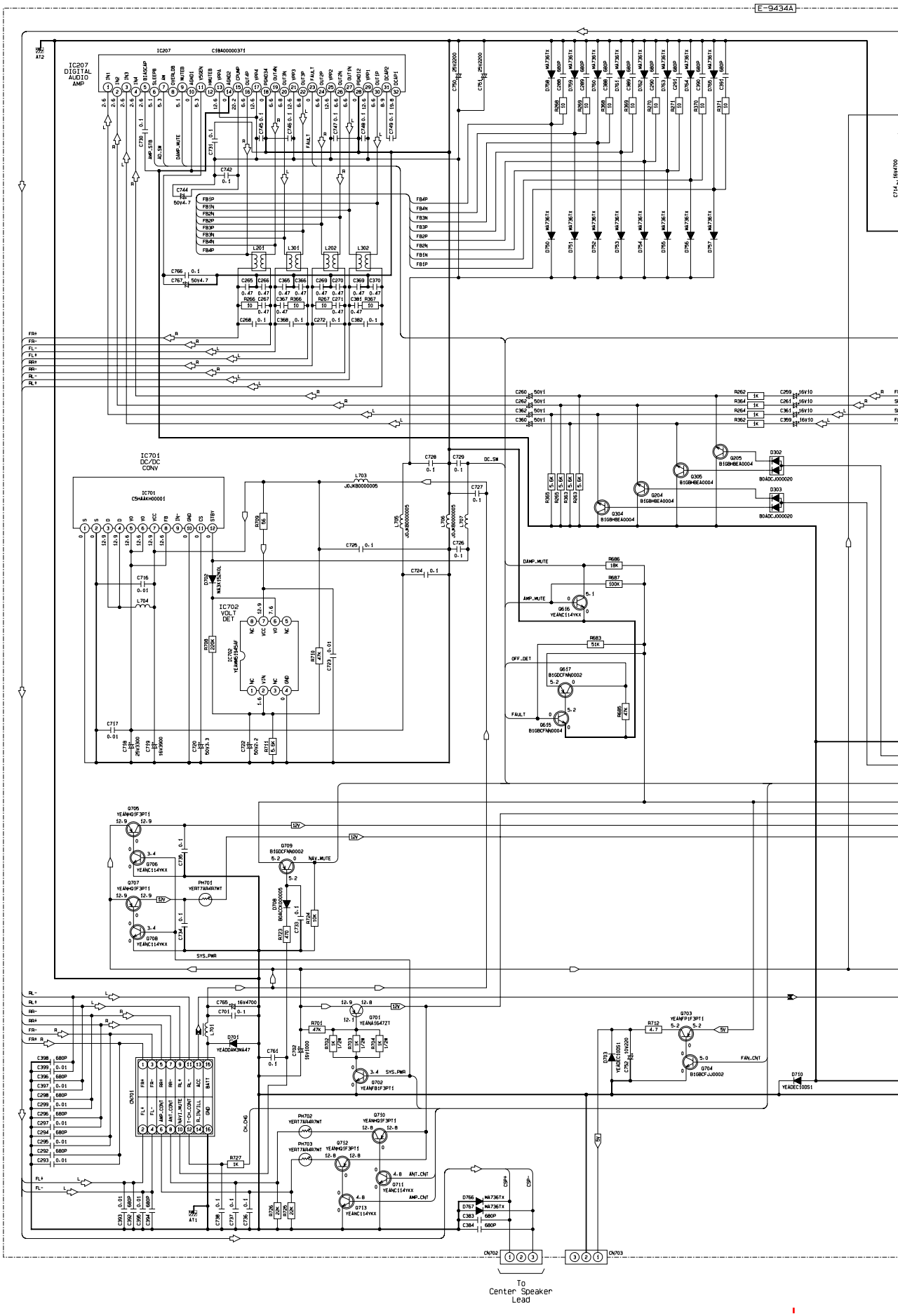

21.12. DVD Servo-1 Block

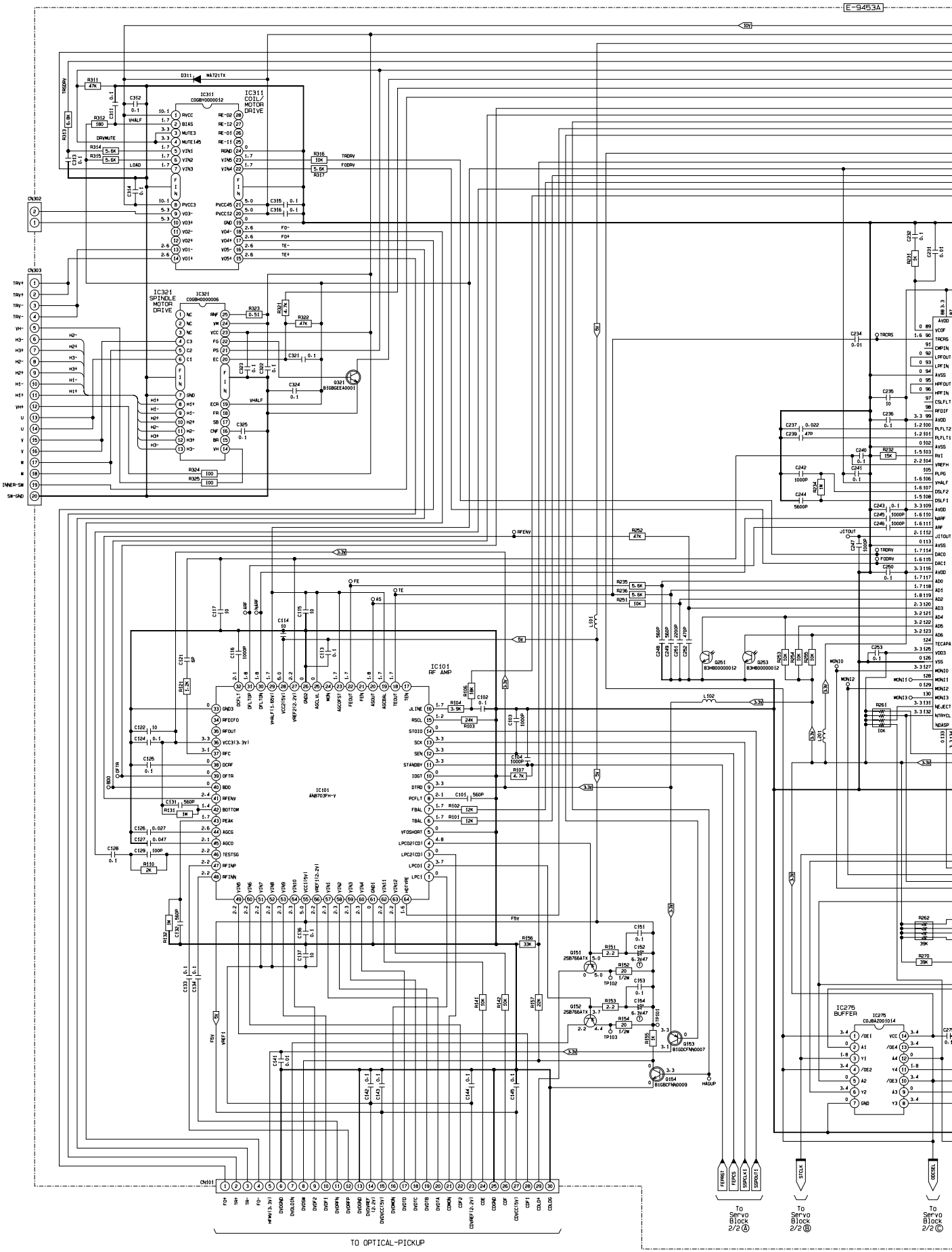

21.13. DVD Servo-2 Block

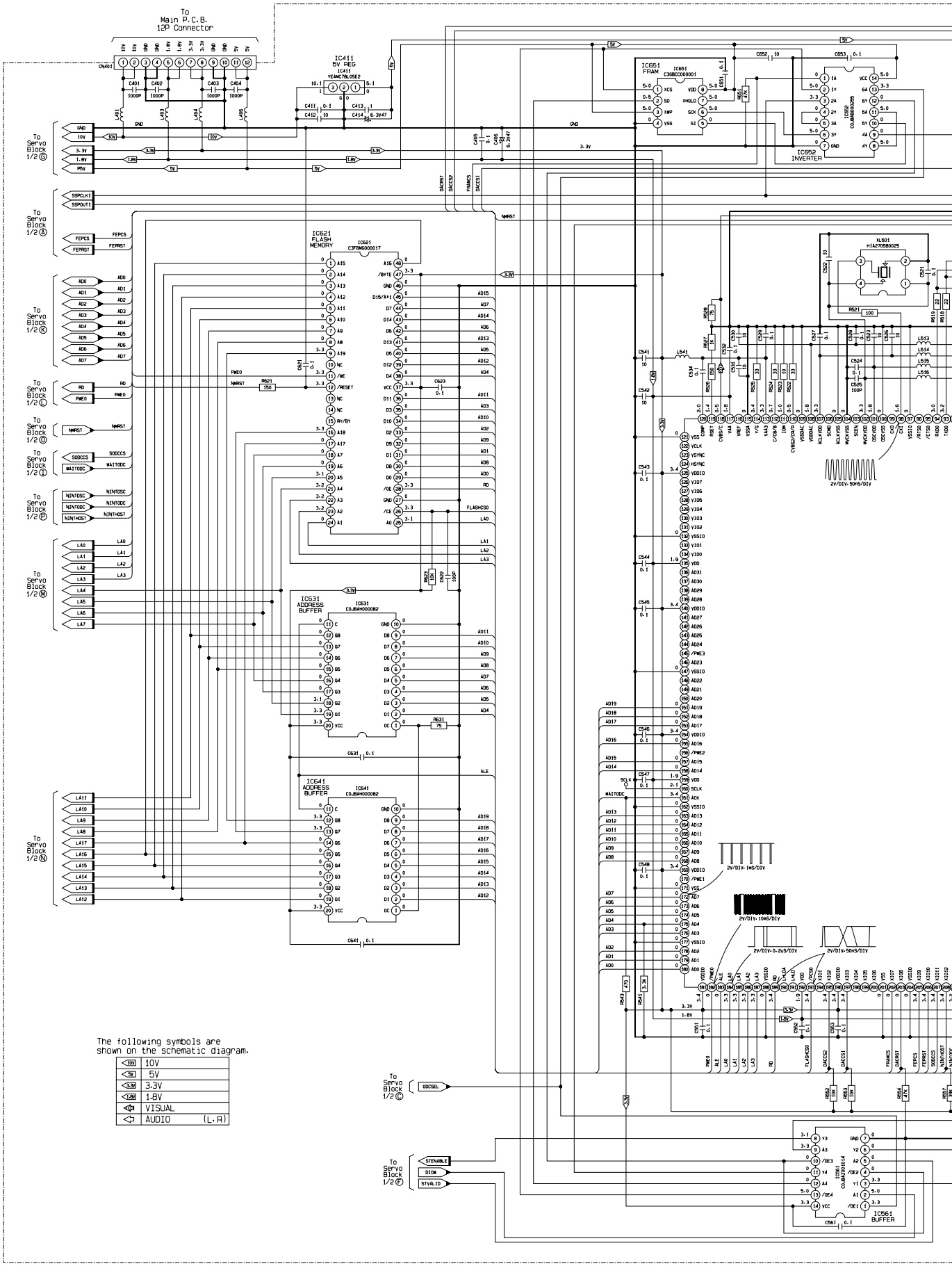

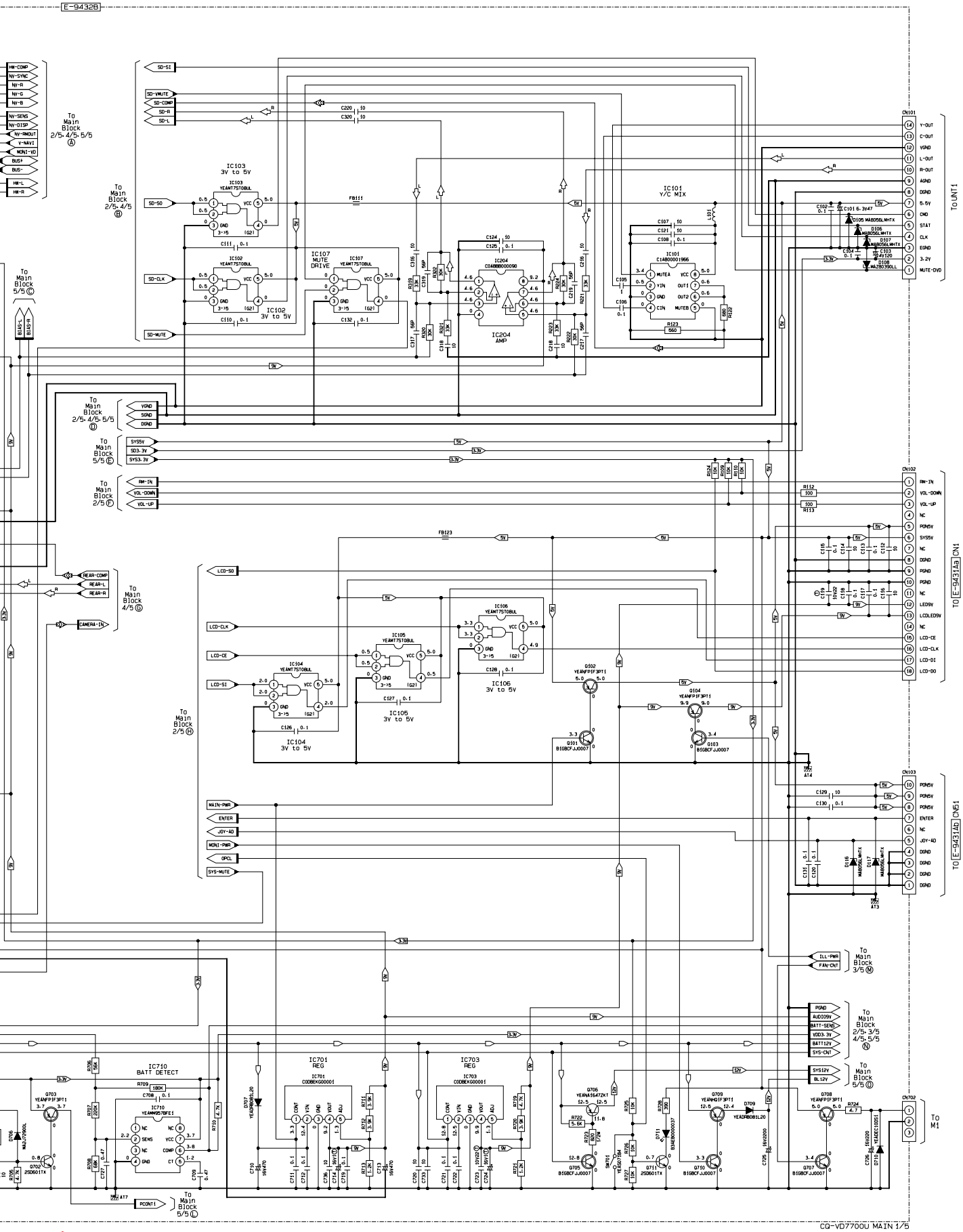
E-9432B
To Main Block 2/5.4/5.5/5 Ⓐ
To Main Block 2/5.4/5 Ⓗ
To Main Block 5/5 Ⓒ
To Main Block 2/5.4/5.5/5 Ⓓ
To Main Block 5/5 Ⓔ
To Main Block 2/5 Ⓕ
To Main Block 4/5 Ⓖ
To Main Block 2/5 Ⓡ
To Main Block 3/5 Ⓜ
To Main Block 2/5.3/5 4/5.5/5 Ⓝ
To Main Block 5/5 Ⓤ
To Main Block 5/5 Ⓛ
To M1
TO UNIT1
TO E-9431AB CN1
TO E-9431AD CN61
IC101 Y/C MIX
IC102 3V to 5V
IC103 3V to 5V
IC104 3V to 5V
IC105 3V to 5V
IC106 3V to 5V
IC107 MUTE DRIVE
IC204 AMP
IC701 REG
IC703 REG
IC710 BATT DETECT
CQ-VD7700U MAIN 1/5

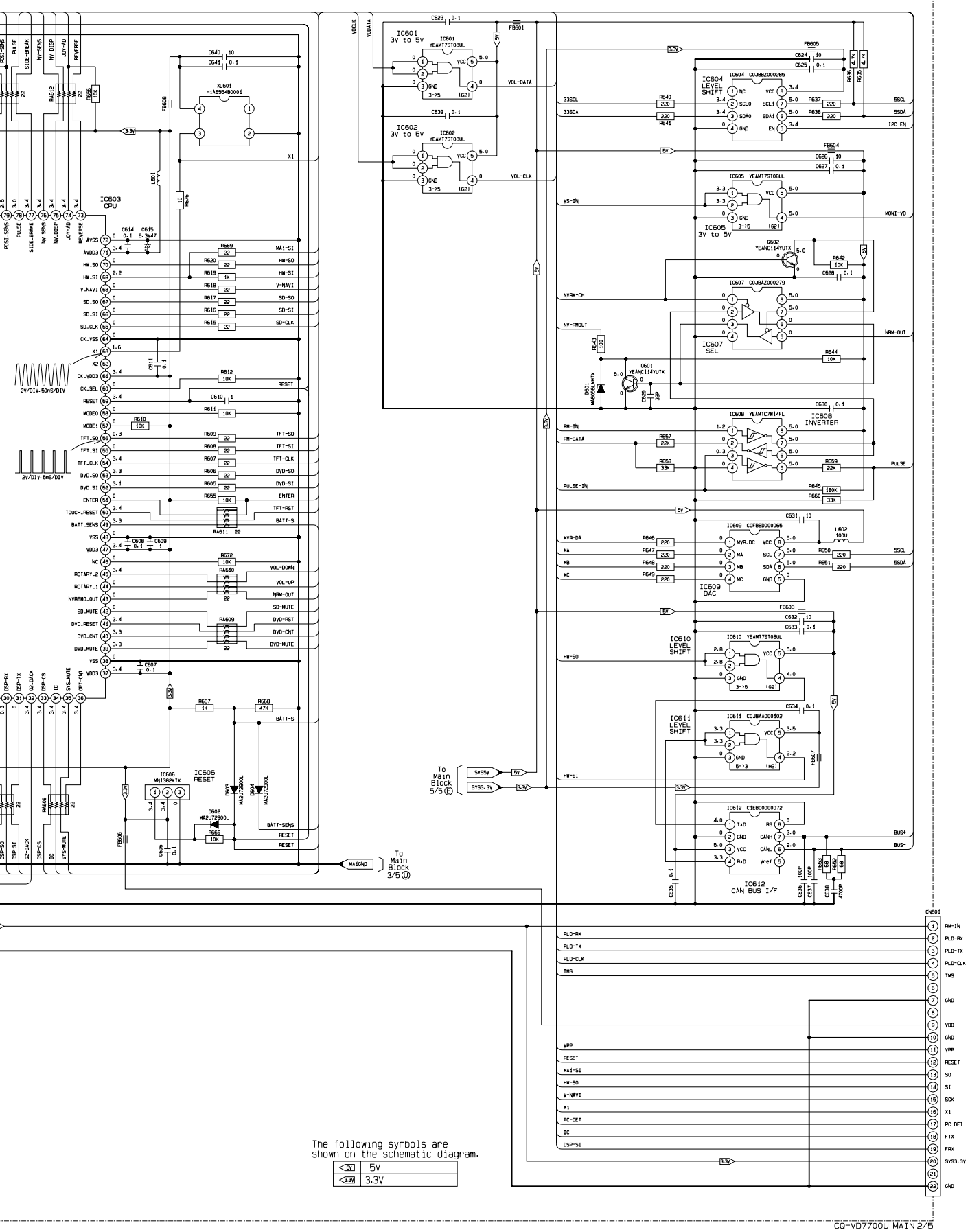

The following symbols are shown on the schematic diagram.

5V	5V
3.3V	3.3V

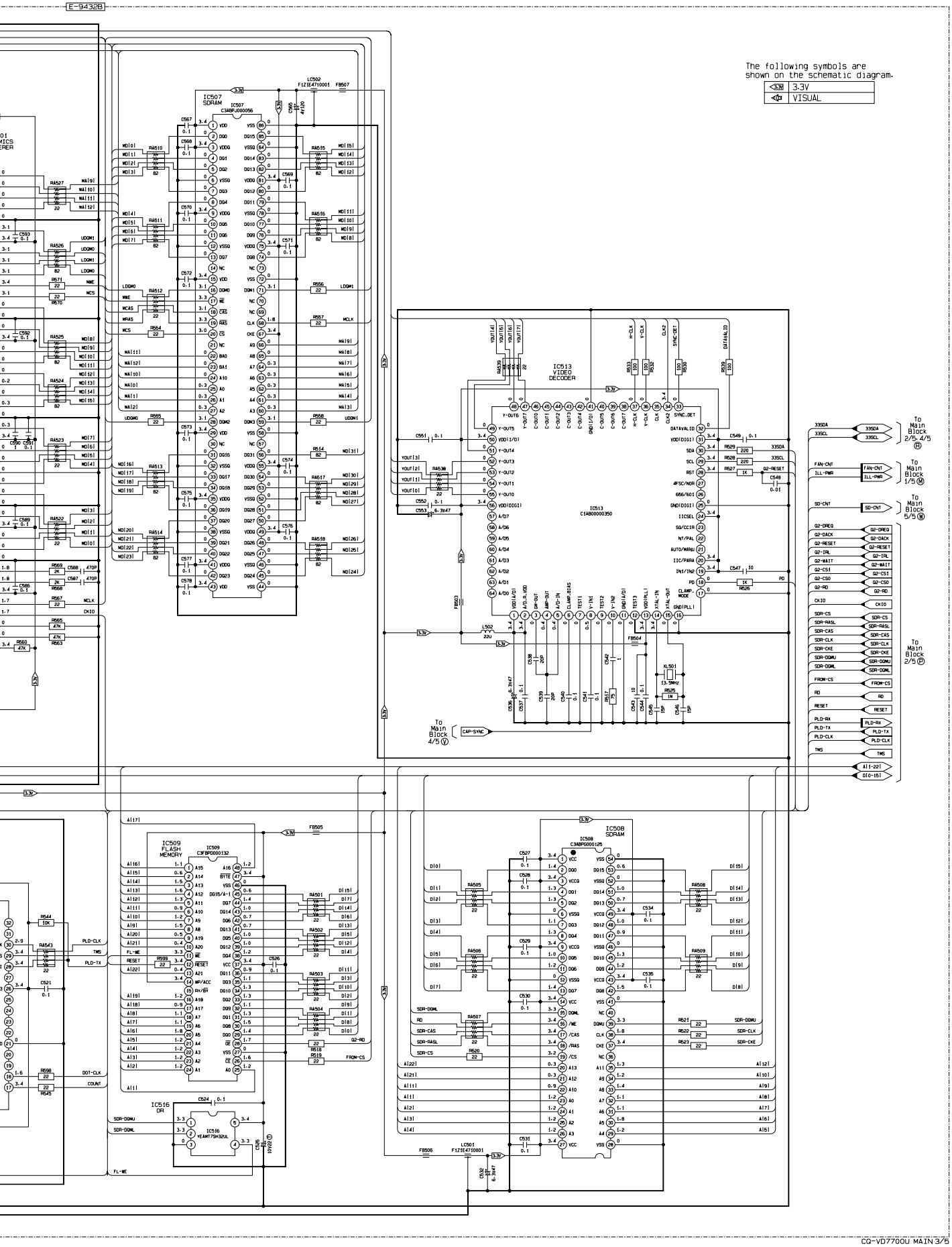
E-94328
The following symbols are shown on the schematic diagram.
3.3V
VISUAL
IC507 SDRAM
IC513 VIDEO DECODER
IC513 C1ABD0000350
IC509 FLASH MEMORY
IC508 SDRAM
IC516 OR
To Main Block 4/5 (V)
To Main Block 2/5, 4/5 (H)
To Main Block 1/5 (M)
To Main Block 5/5 (W)
To Main Block 2/5 (P)
CQ-VD7700U MAIN 3/5

The following symbols are shown on the schematic diagram.

9V	9V
5V	5V
3.3V	3.3V
2.5V	2.5V
VISUAL	VISUAL
AUDIO (L.R)	AUDIO (L.R)

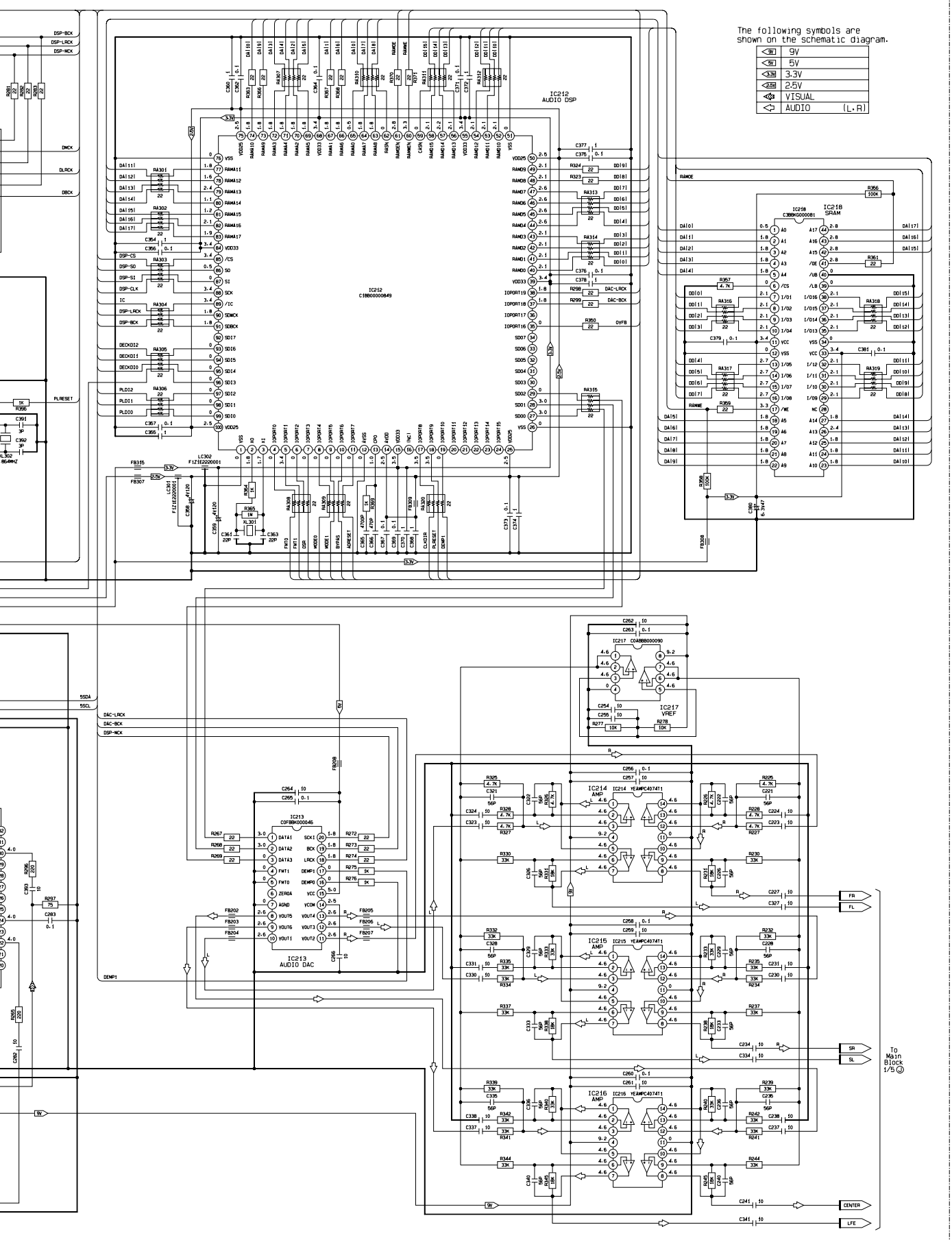

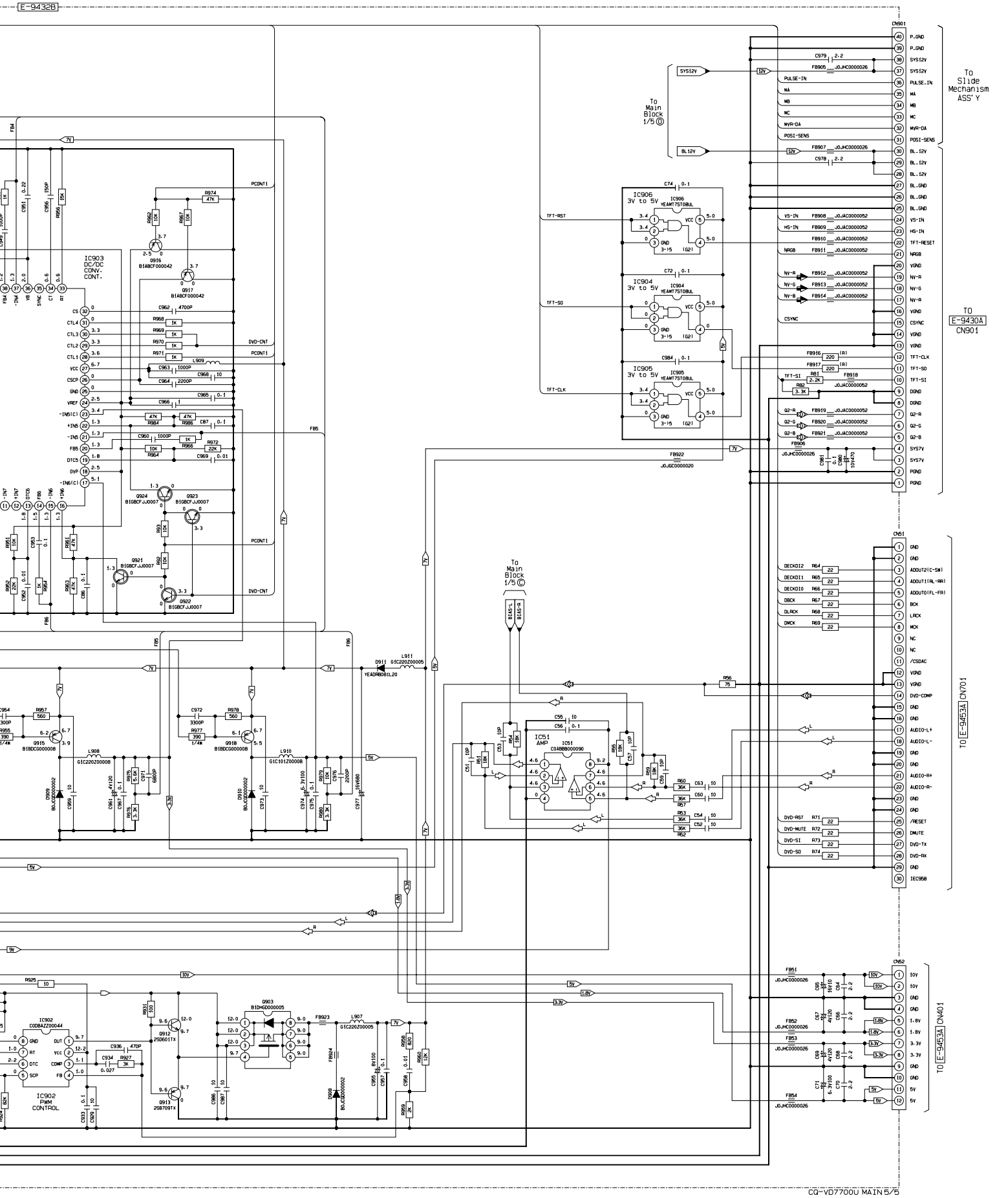
E-9432B
IC903 DC/DC CONV. CONT.
IC902 PWM CONTROL
IC902 C0DBAZZ00044
IC906 3V to 5V YEAM175T0BUL
IC904 3V to 5V YEAM175T0BUL
IC905 3V to 5V YEAM175T0BUL
IC51 AMP C0ABBB0000090
CN901
P.GND
SYS12V
PULSE-IN
MA
MB
MC
MVR-DA
POSI-SENS
BL.12V
BL.GND
VS-IN
HS-IN
TFT-RESET
NRGB
VGND
NY-R
NY-G
NY-B
CSYNC
TFT-CLK
TFT-SO
TFT-SI
DGND
Q2-R
Q2-G
Q2-B
SYS7V
PGND
To Slide Mechanism ASS'Y
TO E-9430A CN901
To Main Block 1/5 Ⓑ
To Main Block 1/5 Ⓒ
CN51
DECKDI2
DECKDI1
DECKDI0
DBCK
DLRCK
DMCK
/CSDAC
DVD-COMP
AUDIO-L+
AUDIO-L-
AUDIO-R+
AUDIO-R-
DVD-RST
DVD-MUTE
DVD-SI
DVD-SO
/RESET
DMUTE
DVD-TX
DVD-RX
IEC958
TO E-9453A CN701
CN52
10V
1.8V
3.3V
5V
TO E-9453A CN401
CQ-VD7700U MAIN 5/5

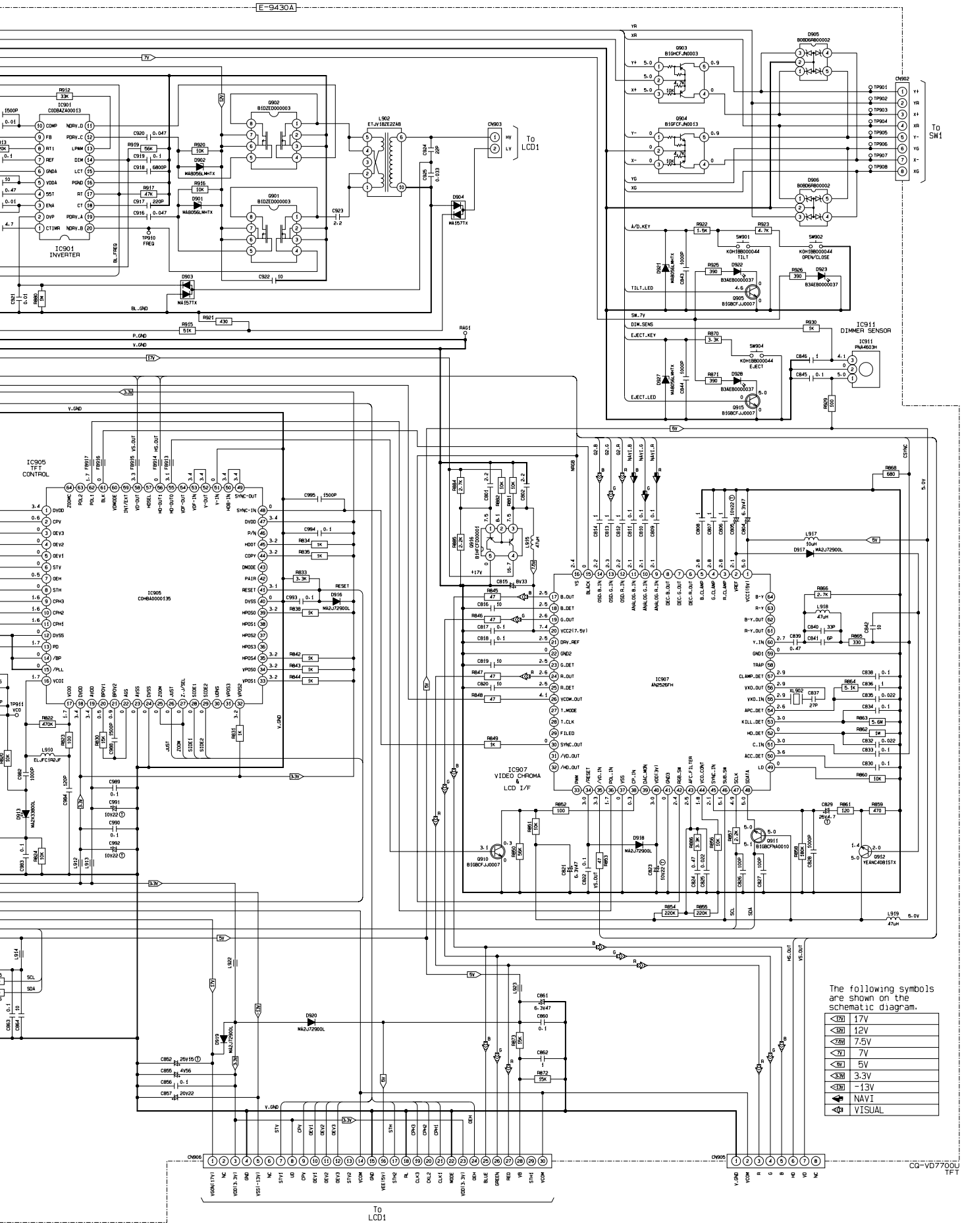
E-9430A
IC901
INVERTER
IC905
TFT
CONTROL
IC907
VIDEO CHROMA
&
LCD I/F
IC911
DIMMER SENSOR
To
LCD1
To
SW1
CQ-VD7700U
TFT
The following symbols
are shown on the
schematic diagram.
17V
12V
7.5V
7V
5V
3.3V
-13V
NAVI
VISUAL